SECURITON

ASD 532

Aspirating Smoke Detector

Mounting and installation

as of firmware version 01.04.xx

Manufacturer:
Securiton AG
Alpenstrasse 20
3052 Zollikofen, Switzerland
www.securiton.ch

The product (hardware, software and technical documentation) is subject to the copyright of the manufacturer. Any prohibited modification, misuse, copying or prohibited sale of this product represents a violation of the copyright and will be legally prosecuted.

Copyright by Securiton AG

Validity

Notice

The following document is valid only for the product described in technical description T 140 421, Section 1. The document contains the mounting and installation instructions for the ASD 532 aspirating smoke detector. Technical description T 140 421 is a component of the mounting and installation instructions.

In this document only the points necessary for mounting and installing the ASD 532 are described. The general specifications of the ASD 532 aspirating smoke detector can be found in technical description T 140 421.

This document[1] is available in the following languages:	German	T 140 424 de
	English	T 140 424 en
	French	T 140 424 fr
	Italian	T 140 424 it
	Spanish	T 140 424 es
	Korean	T 140 424 ko
	Portuguese	T 140 424 pt
	Russian	T 140 424 ru
	Swedish	T 140 424 sv

Current edition:	Index d	13.12.2021	Po/Ksa

Notice

The following document is applicable to the ASD 532 aspirating smoke detector with the following production version and firmware version:

Production version	**Firmware version**
from 131221	from 01.04.xx

The validity of older production versions and firmware versions is guaranteed, with the exception of the new functionalities described in this edition. Additional information about the new functionalities can be found in the document history.

Other documents

Data sheet ASD 532		T 140 422	de / en / fr / it / es / pt / ru / sv
Technical description FidesNet		T 140 741	de / en
Material for the sampling pipe		T 131 194	Multilingual (ED / FI)
Commissioning protocol		T 140 423	Multilingual (EDFI)
Data sheets	XLM 35	T 140 088	de / en / fr / it / es / pt / ru / sv
	ML-SFD	T 140 822	de / en / fr / it / es / pt / ru / sv
	RIM 36	T 140 364	de / en / fr / it / es / pt / ru / sv
	SIM 35	T 140 011	de / en / fr / it / es / pt / ru / sv
	SMM 535	T 140 010	de / en / fr / it / es / pt / ru / sv
	NCU 900	T 140 742	de / en
	RCU 700	T 140 743	de / en
Aspirating Fan Unit AFU 32 mounting instructions		T 140 426	Multilingual (EDFI)

[1] Reference document: T 140 421, Index d

Contents

1	**General**	**7**
1.1	Purpose	7
1.2	Safety and the environment	7
1.2.1	Notice and warning symbols	7
1.2.2	Safety information	8
1.2.3	Disposal	8
1.3	Abbreviations and terms	8
2	**Mounting**	**10**
2.1	Mounting guidelines	10
2.2	Dimensioned drawing / drilling plan for the detector housing	10
2.3	Material for the sampling pipe	11
2.4	Mounting the detector housing	12
2.4.1	Opening and closing the detector housing	13
2.4.2	Mounting positions for the detector housing	14
2.4.3	Removing the air outlet pipe plug	15
2.4.4	Turning the labelling strip	15
2.5	Mounting the sampling pipe	16
2.5.1	General	16
2.5.2	Mounting with PVC tubes and fittings	16
2.5.3	Mounting with ABS tubes and fittings	16
2.5.4	Mounting with metal pipes and fittings	17
2.5.5	Linear expansion	17
2.5.6	Mounting the sampling pipe	18
2.5.7	Mounting for equipment monitoring	19
2.5.7.1	Screw-free fastening of the sampling pipe	19
2.5.7.2	Transition to a flexible tube	20
2.5.8	Creating the sampling holes	21
2.5.9	Mounting the sampling hole clips and maintenance clips	21
2.5.10	Mounting the sampling funnel	21
2.5.11	Mounting sampling stubs for a ceiling bushing	22
2.5.12	Mounting the dust filter unit, dirt trap box, dust retaining box, water retaining box	23
3	**Installation**	**24**
3.1	Regulations	24
3.2	Cable entry	24
3.3	Using the smoke sensor	25
3.4	Installing additional modules	26
3.5	Electrical connection	27
3.5.1	Terminal assignment Main Board AMB 32	27
3.5.2	Terminal assignment for Line Module XLM 35 / ML-SFD	28
3.5.3	Terminal assignment for RIM 36 Relay Interface Module	28
3.5.4	Terminal assignment of an SIM 35 Serial Interface Module	28
3.6	Connection variants	29
3.6.1	Power supply	29
3.6.2	Reset input	29
3.6.3	Control	30
3.6.3.1	Control via voltage supply by means of auxiliary relay	30
3.6.3.2	Control via “Reset external” input	31
3.6.4	Connection to the FACP line	32
3.6.4.1	Connection to zone detection via AI / St relays	32
3.6.4.2	Connection to selective identification or addressable loop via AI / St relay	32
3.6.4.3	Connection to SecuriFire / Integral addressable loop from XLM 35 / ML-SFD	33
3.6.5	OC outputs	33

Contents

4 Article numbers and spare parts 34
4.1 Detector housings and accessories 34
4.2 Sampling pipe and accessories 34

5 Technical data 35

6 List of figures 36

Document history 37

1 General

1.1 Purpose

The ASD 532 aspirating smoke detector has the task of continuously taking air samples via a sampling pipe tube network from a monitored area and feeding the samples to a smoke sensor. Thanks to this detection method and the product's excellent properties under severe ambient conditions, the ASD 532 aspirating smoke detector is used wherever problems are to be expected owing to poorly accessible monitored areas or latent disturbance variables during operation such that optimal protection can no longer be guaranteed with conventional point detectors.

The SSD 532 smoke sensor is used in the ASD 532. It is available in the three following versions and sensitivity ranges:

- SSD 532-1 Alarm sensitivity range 0.5%/m to 10%/m
- SSD 532-2 Alarm sensitivity range 0.1 %/m to 10%/m
- SSD 532-3 Alarm sensitivity range 0.02%/m to 10%/m.

The ASD 532 aspirating smoke detector has two slots for additional modules. The following modules can be fitted:

- XLM 35 SecuriLine eXtended Module (only if no ML-SFD fitted)
- ML-SFD M-Line module (only if no XLM 35 fitted)
- RIM 36 Relay Interface Module with 5 relays
- SIM 35 Serial Interface Module (only if no UIM 35 fitted)
- UIM 35 universal interface module (only if no SIM 35 fitted)

1.2 Safety and the environment

Provided the product is deployed by trained and qualified personnel in accordance with this document, and provided the safety symbols all notices are observed, there is no danger to persons or property under normal conditions and when used properly. The product fulfils the requirements ensuring personal safety and environmental protection during operation. National and state-specific laws, regulations and directives must be observed and adhered to in all cases.

Observe these danger notices. They help prevent accidents and damage.

1.2.1 Notice and warning symbols

The following notice and warning symbols are used to draw attention to hazards and special properties.

Danger

The product may represent an immediate danger with a high level of risk to persons if the notice is not duly observed. If the danger is not avoided, death or serious injury may result.

Warning

The product may represent a possibly imminent danger with a medium level of risk to persons if the notice is not duly observed. If the danger is not avoided, death or serious injury may result.

Caution

The product may represent a possibly imminent danger with a low level of risk to persons if the notice is not duly observed. If the danger is not avoided, a minor injury may result.

Notice

If this notice is not observed, the product may malfunction, may cause property damage, or may be harmful to the environment.

1.2.2 Safety information

Read the user instructions

To ensure safe and proper use, it is absolutely necessary to read the instructions and other documentation accompanying the product before use and to keep such documentation at hand for later reference. It is imperative that the danger information in particular is observed.

Electrostatic discharge

The product includes electronic components that are sensitive to electrostatic discharge (ESD). Contact with persons or objects can cause an electrostatic discharge that damages or destroys the product. ESD bands for preventing electrostatic discharge are used for grounding persons and for equipotential bonding.

1.2.3 Disposal

Electrical and electronic devices and batteries

It is not permitted to dispose of electrical and electronic devices or batteries in the domestic rubbish. As the end user you are legally obliged to return them. Used electrical and electronic devices as well as batteries can be returned to the seller or taken to a designated recycling centre (e.g. a community collection point or dealer) at no cost.

Recycling

The product and its components including their packaging consist of recyclable material and can be disposed of for recycling purposes as described in this document.

1.3 Abbreviations and terms

The following abbreviations and terms are used in this document. The abbreviations for tube material and accessories are listed in a separate document: T 131 194 (see also Sec. 2.3).

ABS	=	Acrylonitrile-butadiene styrene (plastic)
AFS 32	=	Air Flow Sensor
AFU 32	=	Aspirating Fan Unit
AI	=	Alarm
AMB 32	=	ASD main board
ASD	=	Aspirating Smoke Detector
ASD Config	=	configuration software for the ASD 532
ASD PipeFlow	=	Calculation software for the sampling pipe, “ASD PipeFlow” as of Version 2.3
Default	=	Preset values / settings
DIN	=	Deutsche Industrie Norm (German industry standard)
EasyConfig	=	Commissioning process without the “ASD Config” configuration software
EDP	=	Electronic data processing
EMC	=	Electromagnetic compatibility
EN 54	=	European standards for fire alarm systems (DE = DIN, CH = SN, AT = Ö-Norm)

➔➔

Continuation:

FACP	=	Fire alarm control panel
FAS	=	Fire alarm system
FidesNet	=	Fire detection systems Net (networking solution, application name)
Flush mounting / surface mounting	=	Flush mounted / surface mounted
FW	=	Firmware
GND	=	Supply ground (minus (-) pole)
HW	=	Hardware
IEC	=	International Electrotechnical Commission
Initial reset	=	First start-up on commissioning
IPS 35	=	Insect Protection Screen
LED	=	Light-emitting diode (indicator)
Manufacturer	=	Securiton
ML-SFD	=	M-Line-Special Fire Detector
NCU	=	Network communication unit to the FidesNet “Network Communication Unit” (FidesPort)
NCU Config	=	Web application for configuring the FidesNet
OC	=	Open collector output
OEM	=	Original Equipment Manufacturer (reseller)
PA	=	Polyamide (plastic)
PC	=	Personal computer
PMR 81	=	Semi-conductor relay
Port	=	Input or output component
PVC	=	Polyvinyl chloride (plastic)
RCU	=	FidesNet remote control unit “Remote Control Unit” (FidesControl)
RIM 36	=	Relay interface module
SecuriFire	=	FAS system
SecuriLine	=	Fire detector addressable loop
SIM 35	=	Serial Interface Board
SMM 535	=	Serial Master Module
SSD 532	=	Smoke sensor
St	=	Fault
SW	=	Software
Te.	=	Terminal
UIM 35	=	universal interface module (RS-485)
UMS 35	=	Universal Module Support
VDC	=	Direct current voltage
VS	=	Pre-signal
Watchdog	=	Monitoring of the microcontroller
XLM 35	=	eXtended Line Module

2 Mounting

2.1 Mounting guidelines

Notices

Material and products; only the following materials supplied, approved and listed by the manufacturer may be used to create the system:

- Detector housings, smoke sensors, additional modules;
- Tube materials and fittings for the sampling pipe, accessory materials, pipe clamps (according to T 131 194).

Materials from other sources do not conform to EN 54-20 approval and may only be used if the manufacturer's written consent has been obtained.

Installation materials such as cables, intermediate distributors and fastening materials are usually supplied by the customer.

Tools for handling the detector housing: The tools listed below are required for mounting and installation (sorted in the sequence in which they are used in this document):

• Opening the detector housing	flat-blade screwdriver No. 5 (8 mm)
• Removing the pipe plug	flat-blade screwdriver No. 2 (4 mm)
• Securing the detector housing	Torx screwdriver T20
• Module holder for additional modules	Torx screwdriver T15
• Terminals	no. 1 flat-blade screwdriver (3.5 mm)
• Replacing printed AMB circuit boards	Torx screwdriver T10
• Replacing the aspirating fan unit	Torx screwdriver T15

2.2 Dimensioned drawing / drilling plan for the detector housing

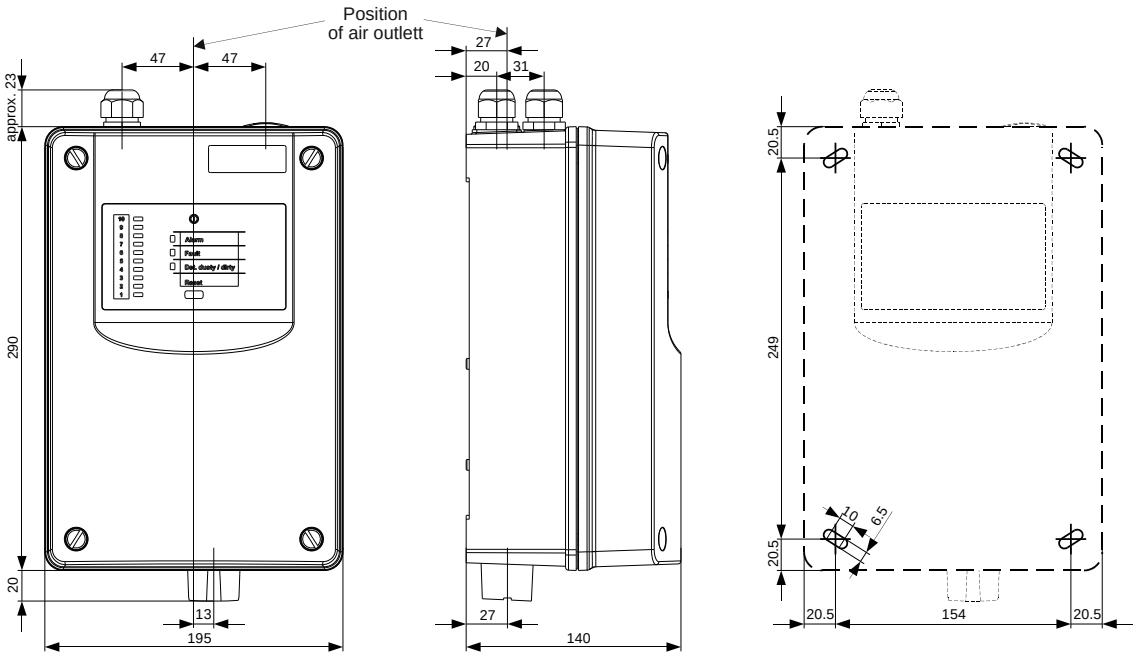

Fig. 1 Detector housing dimensioned drawing and drilling plan

2.3 Material for the sampling pipe

Notices

Tube materials and fittings must be rated at least as Class 1131 of norm **EN 61386-1**. Document **T 131 194** lists materials that meet this standard; it is part of the device approval of the ASD 532 according to EN 54-20.

Other materials do not conform to the EN 54-20 standard and may be used only if the manufacturer's written consent has been obtained and the following conditions are met.

- Compression resistance = min. 125 N (EN 61386-1)
- Shock resistance = min. 0.5 kg, fall height of 100 mm (EN 61386-1)
- Temperature range = min. –15°C to +60°C (EN 61386-1)
- Tube inner diameter = 19 to 22 mm
- Bending radius, bend = min. 30 mm.

The tube material is available in various plastics and metals. The individual plastic tube parts are usually glued. The flexible tube material for equipment monitoring is pluggable. The metal tubes are connected by means of press fittings.

The rigid plastic tubes can be shaped by heating. The tubes can be painted a different colour, although attention must be paid to the chemical compatibility between paint and tube.

The following materials are available:

Material	Connection
PVC (polyvinyl chloride, contains halogen)	Gluing
ABS (acrylonitrile-butadiene styrene, contains halogen)	Gluing
PA (polyamide, contains no halogen)	Plug-in connection
Copper	Press fitting
Stainless steel	Press fitting

Notices

- The two materials that use adhesives (PVC and ABS) must <u>not</u> be combined as different adhesives are used.
- Transitions from PVC or ABS to PA materials (flexible tube parts) are possible using special adhesive-screw junctions.
- As a material, PVC releases corrosive and toxic gases if burned or improperly disposed of. The use of PVC materials should therefore be restricted to wherever it is expressly permitted by the operator of the installation. In applications stipulated the use of halogen-free plastics, ABS or PA materials must be used for laying the sampling pipe. Country-specific guidelines and regulations must be observed.
- The adhesives and cleaning agents used for connecting PVC and ABS materials contain solvents and are combustible. For this reason, prior to working with these materials it is imperative to read and observe the safety instructions and information provided by the adhesive supplier.

A list of the available **materials for the sampling pipe** (pipes, fittings etc.) for the ASD 532 is available in a separate document (**T 131 194**).

2.4 Mounting the detector housing

Notices

- Mounting work on the detector housing is best carried out without the smoke sensors fitted.
- The smoke sensor is always installed in the detector box just when the ASD 532 is commissioned (see Sec. 3.3).
- Depending on the circumstances (e.g. long periods of time between mounting and commissioning or if the environment is extremely dusty (construction work), the housing cover should be kept closed until the device is commissioned.

The detector housing should always be kept in the room to be monitored. If this is not possible, ensure that the detector housing is located in a room that has the same air pressure or – in the case of air-conditioned rooms – the same climate and pressure zone. In applications where the sampling pipe and detector housing are mounted in different climate zones, a return sampling pipe to the monitored area is required. The return line can be adapted after removing the air outlet pipe plug on the ASD 532 housing. See also under Sec. 2.4.2 and 2.4.3.

Special settings (larger airflow window, longer delay time etc.) may have to be made in areas with significant temperature fluctuations of more than 20°C at both the sampling pipe and on the detector housing. This also applies to temperature differences of more than 20°C between sampling pipe and detector housing.

An easily accessible installation location should be chosen so that the detector housing can be worked on without aids such as ladders and scaffolding. The ideal installation height for the detector housing is about 1.6 m above ground level (top edge of the detector housing).

On the entry side of the connection cable, a minimum distance of 10 cm to customer-side parts must be observed.

When positioning the detector housing, take into account the fact that the noise caused by the fan may in some cases be perceived as a disturbance. If no suitable location is available for the detector housing, it may be necessary to mount it in a sound insulated cabinet (e.g. ASD sound insulation housing). If air recirculation in the same climate zone as the sampling pipe is necessary, it can be implemented by means of a tube piece out of the acoustically insulated cabinet. The tube piece exiting from the sound insulated cabinet (transition) must be properly sealed. When using the ASD sound insulation housing, an M32 cable screw union is used for the transition. For further details about the ASD sound insulation housing contact the manufacturer.

2.4.1 Opening and closing the detector housing

Notices about opening and closing

- To open the detector box, use a **flat-blade screwdriver no. 5** (8 mm). Smaller flat-blade screwdrivers may damage the material of the rotary snap locks.
- To actuate the **rotary snap locks**, **press** them **firmly** with the screwdriver towards the housing base and then **turn** through 90°. The position of the lock slit shows the current status (see **Fig. 2**):
  ⇒ approx. 45° angled toward detector housing corner = closed;
  ⇒ approx. 45° angled toward detector housing edge = open.
  In either position the rotary snap locks **must** snap into place.

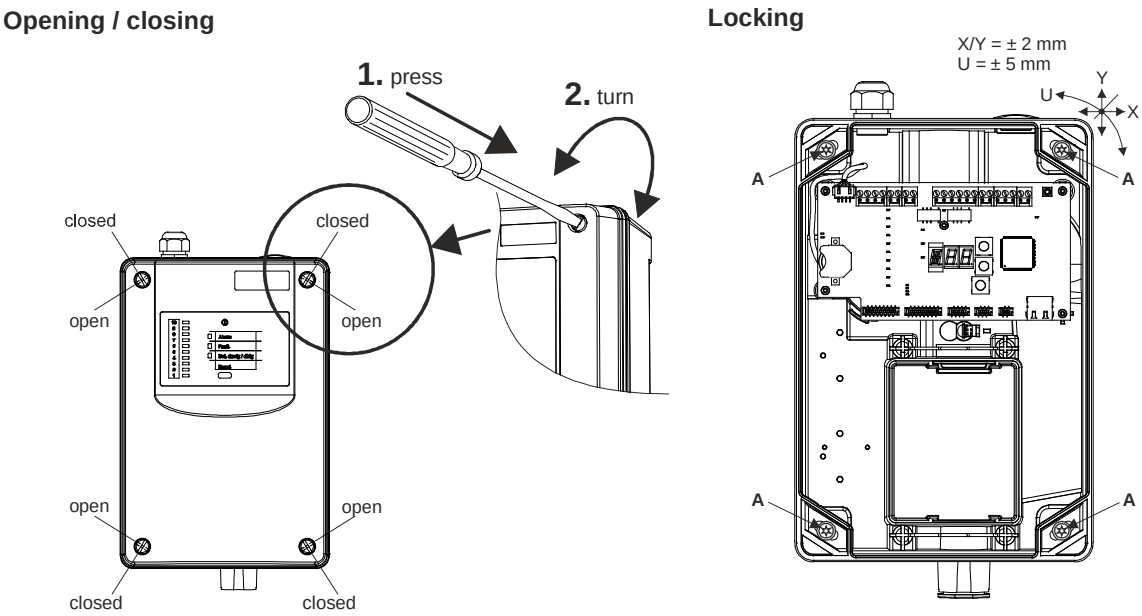

Fig. 2 Open, closing and securing the detector housing

Once the detector housing is open, the four mounting holes in the housing base are accessible.

The detector housing is secured using the four supplied Torx wood screws (Ø 4.5 x 35 mm) and the four U-washers (Ø 4.3/12 x 1 mm) "**A**". Use a **Torx screwdriver T20** to insert and tighten the screws.

The positions of the fastening holes are shown in dimensioned drawing **Fig. 1**. When fastening to masonry, use the S6 dowels supplied.

Notice

When mounting several ASD 532 units next to one another, make sure that the mounting holes are **drilled precisely**. The device can be shifted by a maximum of ±2 mm horizontally and vertically to correct its mounting position. A rotation correction of approx. ±5 mm is possible.

2.4.2 Mounting positions for the detector housing

In principle the detector housing can be mounted in the X, Y or Z axis. However, because of the labelling for the indicator elements, it is advisable to mount the device in the Y axis (vertical, control unit at the top). The sampling pipe is then inserted into the detector housing from below. This makes it easier to feed the tubes to accessory parts such as dust filter unit and water retaining box, which for physical reasons should always be below the ASD detector housing. If feeding the sampling pipe into the detector housing from above is unavoidable, the detector housing can also be rotated through 180° and then mounted (i.e. with the control unit at the bottom). To ensure that control unit labelling is not upside down, turn the control unit labelling strips accordingly (see Sec. 2.4.4).

To prevent the ingress of dirt, the detector housing ships fitted with the pipe plugs (tube network input). Likewise all the cable screw unions are sealed. If there is a return sampling pipe back to the monitored area, it can be connected directly to the detector housing in place of the air outlet pipe plug.

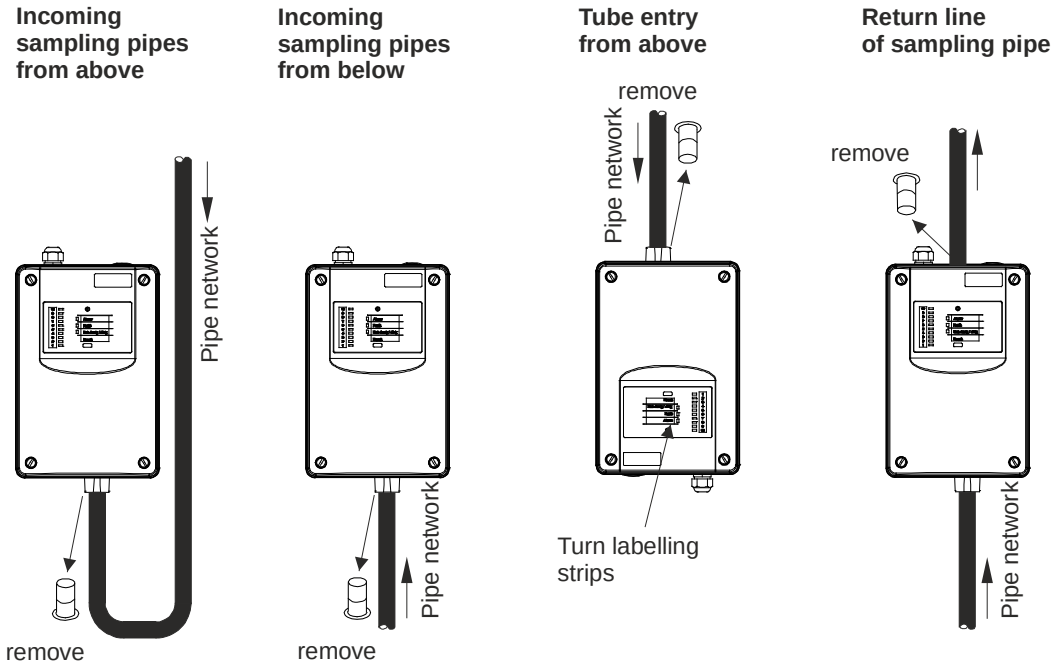

Fig. 3 Mounting position and pipe entries on the detector housing

Notices about pipe entries

- The entry opening in the detector housing is designed so that the sampling pipe simply has to be plugged into place (conical opening). The sampling pipe should only be glued into place in exceptional circumstances and only after consulting with the manufacturer.
- The air outlet pipe plug (with openings) is to be fitted to the air outlet opening only.
- The pipe plugs must not be glued in the ASD housing (plug-in connector).

2.4.3 Removing the air outlet pipe plug

Insert the blade of a **flat-blade screwdriver no. 2** (4 mm) into one of the side recesses of the air outlet pipe plug. To release the pipe plug, prise gently toward the ASD housing.

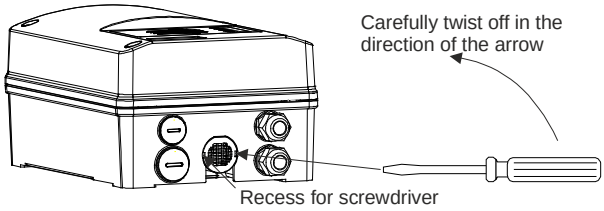

Fig. 4 Removing the air outlet pipe plug

2.4.4 Turning the labelling strip

Open the detector housing to turn the labelling strips.

The labelling strips can be pulled out of the cover by their tabs and after turning over inserted again into the holder.

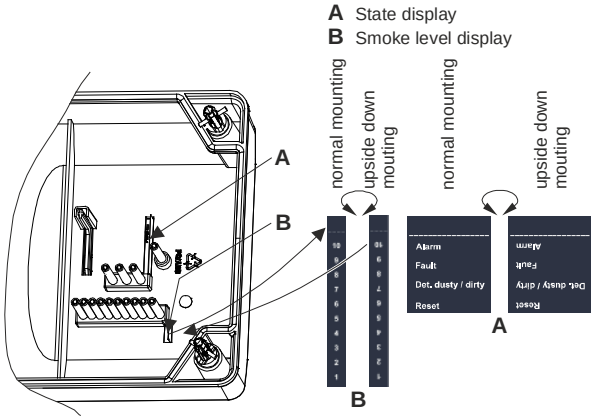

Fig. 5 Turning the labelling strips

2.5 Mounting the sampling pipe

2.5.1 General

The mounting and installation are to be carried out by analogy as specified in Section “Planning” in the Technical Description T 140 421. Any deviation from the layout of the sampling pipe and sampling holes (also outside the limits calculated using “ASD PipeFlow”) is subject to the consent of the manufacturer.

The sampling pipe can be made of hard PVC or halogen-free ABS material, depending on requirements. In special applications – e.g. in extremely corrosive environments – other tube materials can also be used, subject to the specifications set out in Sec. 2.3.

Notice – installation and modification of the sampling pipe

System performance depends on the sampling pipe. Any extensions or modifications to the installation may cause functional faults. The effects of such changes must be checked. It is very important to adhere to the specifications in Sec. “Planning” (T 140 421). The “ASD PipeFlow” calculation software is available from the manufacturer.

2.5.2 Mounting with PVC tubes and fittings

As a rule, if the system operator does not specify a halogen-free installation, the sampling pipe can be made using hard PVC tubing. When PVC tube material is installed, the individual tube parts are glued together using a special PVC adhesive (e.g. Tangit for PVC). The adhesive manufacturer’s instructions must be followed. Before gluing, use household paper to remove any dust and grease deposits from the surfaces to be glued (do not use textile cloths). If the tube parts are very dirty, a cleaning agent as specified by the adhesive manufacturer may have to be used.

Notices

- The adhesives and cleaning agents used for connecting PVC materials contain solvents and are combustible. For this reason, prior to working with these materials it is imperative to read and observe the safety instructions and information provided by the adhesive supplier.
- The two glueable materials – ABS and PVC – must not be combined, since different adhesives are used.

2.5.3 Mounting with ABS tubes and fittings

If required, halogen-free ABS material can be used for the sampling pipe. When ABS tube material is installed, the individual tube parts are glued together with a special ABS adhesive (e.g. Tangit for ABS). The adhesive manufacturer’s instructions must be followed. Before gluing, use household paper to remove any dust and grease deposits from the surfaces to be glued (do not use textile cloths). If the tube parts are very dirty, a cleaning agent as specified by the adhesive manufacturer may have to be used.

Notices

- The adhesives and cleaning agents used for connecting ABS materials contain solvents and are combustible. For this reason, prior to working with these materials it is imperative to read and observe the safety instructions and information provided by the adhesive supplier.
- The two glueable materials – ABS and PVC – must not be combined, since different adhesives are used.

2.5.4 Mounting with metal pipes and fittings

Metal tubes (copper, stainless steel) are connected using press fittings according to the manufacturer's instructions. For this purpose, commercially available radial pressing tongs (e.g. REMS radial pressing tongs) with the appropriate V pressing contours can be used.

2.5.5 Linear expansion

Plastics have sizeable linear temperature expansion coefficient, which is why special attention should be given to the linear expansion (extension and contraction) of the sampling tube. An increase in temperature causes the tube to expand; a decrease in temperature causes it to contract. The importance of taking linear expansion into account increases as the temperature at the time of installation deviates from the usual operating temperature.

Linear expansion can be calculated as follows:

Calculation: $\Delta L = L \times \Delta T \times \alpha$

ΔL = Linear expansion in mm
L = Length in metres of the sampling pipe between two fixed points
ΔT = Temperature change in °C
α = Linear expansion coefficient in mm/m°C
for **PVC** = 0.08
for **ABS** = 0.10

Example: sampling pipe length 20 m, anticipated temperature change 10°C, material PVC:

Calculation: $\Delta L = 20 \times 10 \times 0.08 =$ **16 mm**

Notice

For straight layout the linear expansion can be up to **160 mm** over the total sampling pipe length (80 m) within the permitted temperature fluctuation range (20°C). It is therefore essential to ensure that the sampling pipe is able to "move" (slide) inside the pipe clamps. A distance of 200 mm (0.2 m) must therefore be maintained between the last pipe clamp and the end cap.

2.5.6 Mounting the sampling pipe

Notice

When mounting the sampling pipe, make sure the points listed below are noted and observed (see Sec. 2.5.5).

- Pipe clamps at 1 m intervals are used to fasten the sampling pipe.
- The tubes must be cut to size using a pipe cutter. In doing so, ensure that the cut is at a right-angle to the tube axis. Remove any projecting burrs, **Fig. 6**.
- The ends of the individual tube pieces are to be bevelled slightly using a suitable tool, e.g. slightly bevel with a pipe scraper, **Fig. 6**.
- The individual tube sections are connected using fittings. Depending on the tube material used, use either the adhesive process described in Sec. 2.5.2 and 2.5.3 or the pressing process described in Sec. 2.5.4. The tubes are pushed into the fittings as far as the stop, **Fig. 7**.
- The connection points must be sealed tight to prevent the intake of any leakage air.
- If the sampling pipe or parts thereof is laid out vertically (e.g. in a riser or high-rack storage facility), make sure the tubes cannot slide down (secure pipe clamps directly below the fittings as shown in **Fig. 8**).
- The sampling pipe must be fastened so that the tube is able to “operate” within the pipe clamp (linear expansion, see Sec. 2.5.5).
- A distance of at least 0.2 m must be maintained from the T-piece to the pipe clamp, starting from the branching points of the sampling pipe, **Fig. 9**.
- For changes of direction in the space surveillance, it is advisable to use 90° bends rather than 90° angles.
- For flush mounting or mounting in false ceilings, ensure that the tubes are not able to start oscillating by themselves.
- The exact definitive layout of the tubes – particularly in the case of flush mounting – must be documented precisely on the installation plans complete with dimensions.

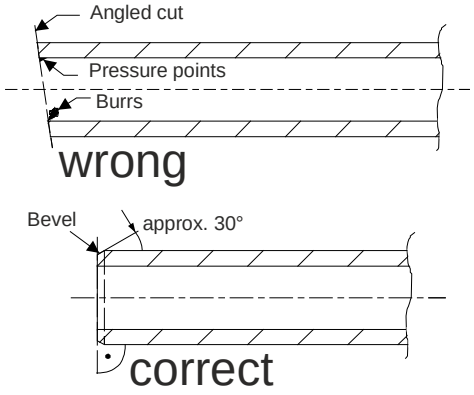

Fig. 6 Cutting the tubes

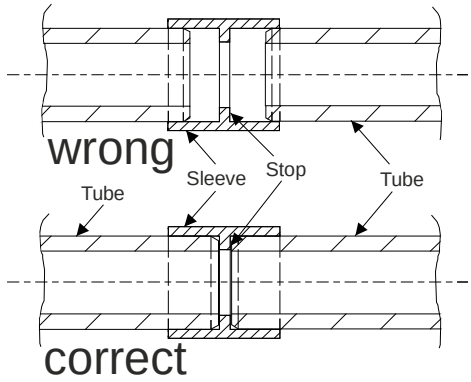

Fig. 7 Assembling the tubes

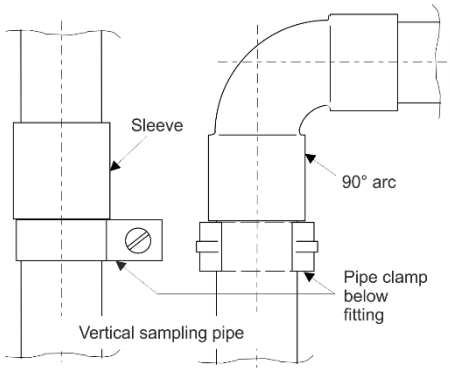

Fig. 8 Vertical sampling pipe

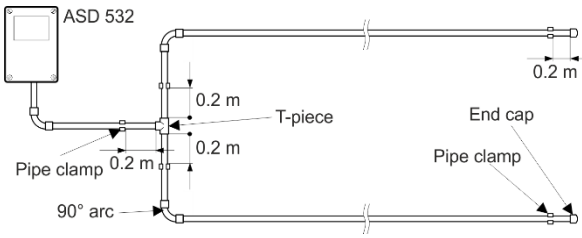

Fig. 9 90° bend, branching point

2.5.7 Mounting for equipment monitoring

When mounting for equipment monitoring (EDP installations, electrical cabinets etc.), plastic tube materials are to be used in principle. The same guidelines as described in Sec. 2.5.6 apply.

Equipment monitoring involves monitoring all the air outlet openings of the monitored devices.

Whenever possible, the sampling pipe and detector housing are always secured directly to the object to be monitored.

2.5.7.1 Screw-free fastening of the sampling pipe

Use the click-on pipe clamps to secure the sampling pipe parts (sampling fixtures) without screws. This allows the sampling fixture or sampling pipe to be removed quickly during maintenance work on the monitored objects.

The click-on pipe clamps are screwed onto the support rails by means of threaded plates.

The support rails are best fastened at right angles to the tube axis to ensure a precise positioning of the sampling pipe (sampling fixture).

Double-sided adhesive tape is used to secure the support rails in the desired position on the object, **Fig. 10**.

Before using the double-sided adhesive tape, make sure the adhesion surfaces are cleaned with a **non-aggressive** cleaning agent (e.g. soap suds or similar).

Cable ties can also be used for securing purposes instead of the double-sided adhesive tape.

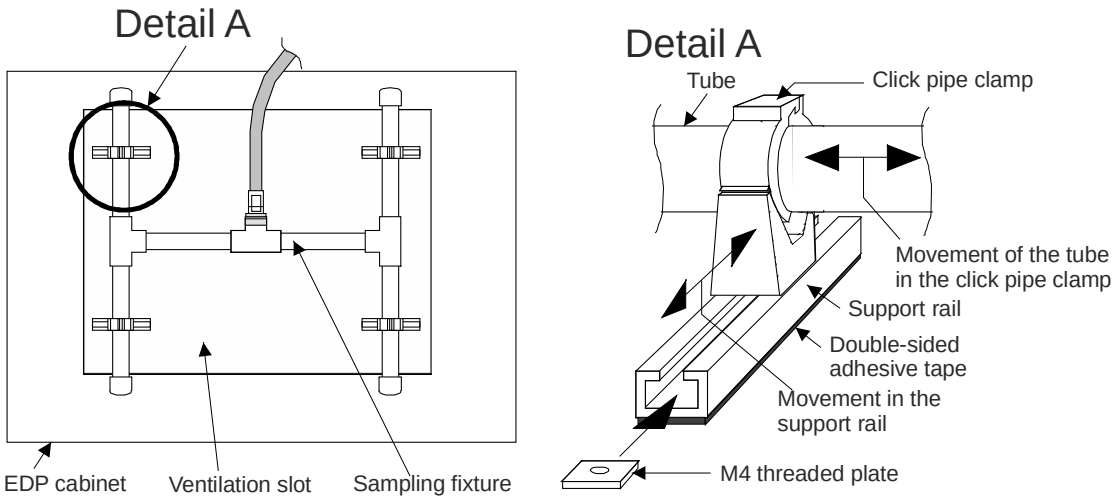

Fig. 10 Screw-free fastening of a sampling fixture

2.5.7.2 Transition to a flexible tube

With equipment monitoring, the transition from rigid to flexible tube can be made in principle using any type of fitting. The parts shown in **Fig. 11** are used for that purpose.

For a rigid sampling pipe made of **PVC** a **PVC threaded ring** with M20 internal thread is glued into the exit side of the fitting. The M20 quick-release coupling is screwed into the adapter for the flexible tube.

If the rigid sampling pipe is made of **halogen-free ABS**, the procedure is identical to that for PVC. Instead of the PVC threaded ring, however, a suitable **threaded ring made of ABS** is used.

The flexible tube is simply snapped into the quick-release coupling and snapped out of it again just as easily for maintenance work.

Notices

- Make sure the interfaces of the flexible tube are implemented “cleanly” so that the sealing ring in the quick-release coupling is not damaged.
- When clicking the flexible tube into place, make sure the tube and the quick-release coupling are pressed firmly against each other to prevent the intake of any leakage air.

For transitions from flexible tubes to sampling fixtures, proceed in the reverse order described above.

Transition from PVC or ABS fittings to flexible tube

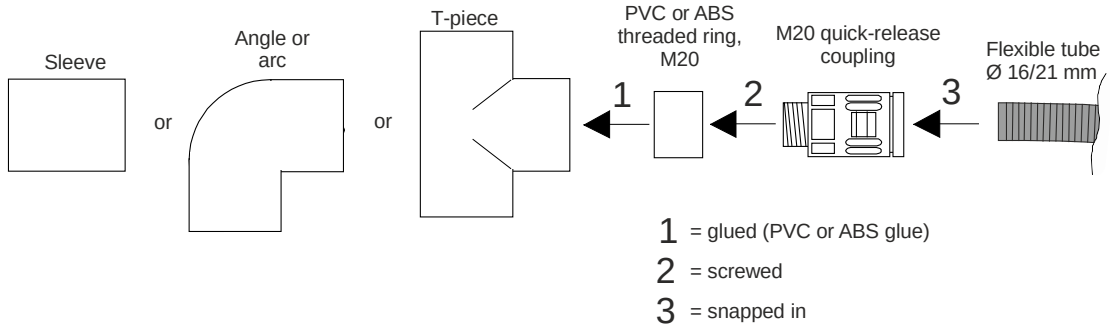

Fig. 11 Transition from fittings to flexible tube

2.5.8 Creating the sampling holes

The hole diameters for the sampling holes have to be determined and created by the customer as described in Sec. “Planning” (T 140 421) and according to the specifications of the “ASD PipeFlow” calculation software.

The sampling holes must be drilled cleanly so that no burrs or pressure points result. Use “new” drills with correctly ground surfaces (**Fig. 12**).

Whistling noises are a sign that the holes have not been neatly drilled. If so, the holes should be re-drilled and/or deburred.

For space surveillance, the sequence of hole diameters set out in Sec. “Planning” (T 140 421) and the specifications of the “ASD PipeFlow” calculation software must be observed strictly.

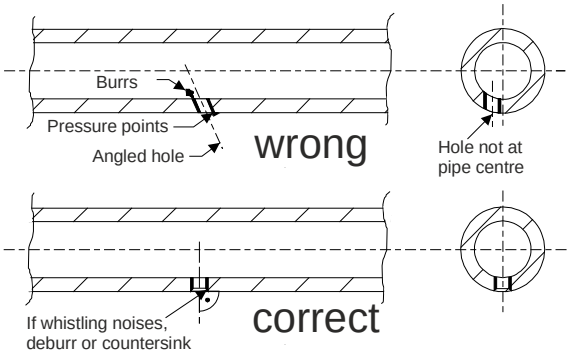

Fig. 12 Creating the sampling holes

If required, the sampling holes can be made using the special “sampling hole clips” (see 2.5.9).

For equipment monitoring, the sampling holes are drilled in the sampling fixture. The sampling holes are drilled into the sampling fixture in the direction of the air outlet from the object to be monitored. If required, these sampling holes can be fitted with sampling funnels (Sec. 2.5.10).

2.5.9 Mounting the sampling hole clips and maintenance clips

Possible only with plastic tubes (PVC/ABS)!
At each required position in the sampling pipe drill a hole 8.5 mm in diameter (uniform Ø). The holes are made at right angles, in the centre of the pipe axis (as shown in **Fig. 12**).

The sampling hole clips are available in various sizes (Ø 2.0 / 2.5 / 3.0 / 3.5 / 4.0 / 4.5 / 5.0 / 5.5 / 6.0 / 6.5 / 7.0 mm). To determine the required sampling hole clips, refer to Sec. “Planning” (T 140 421) and the specifications of the “ASD PipeFlow” calculation software.

The sampling hole clips and the maintenance clips are clipped onto the sampling tube so they snap into the 8.5 mm borehole, **Fig. 13**.

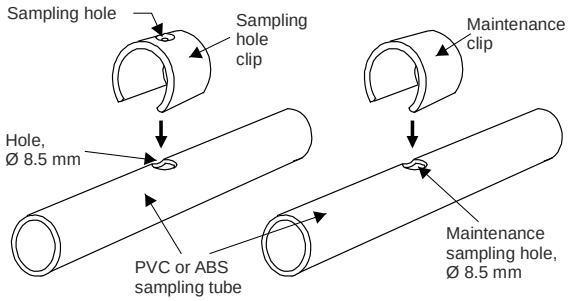

Fig. 13 Mounting clips

2.5.10 Mounting the sampling funnel

Possible only with plastic tubes (PVC/ABS)!
For equipment monitoring objects with a high air-flow rate (strong ventilation), the sampling holes can be fitted with funnels for optimal smoke detection.
If forced ventilation is used in rooms and/or on equipment, the use of sampling funnels is <u>imperative</u>.

The sampling funnels are secured to the tube of the sampling fixture and adjusted to the previously drilled sampling holes (see **Fig. 14**).

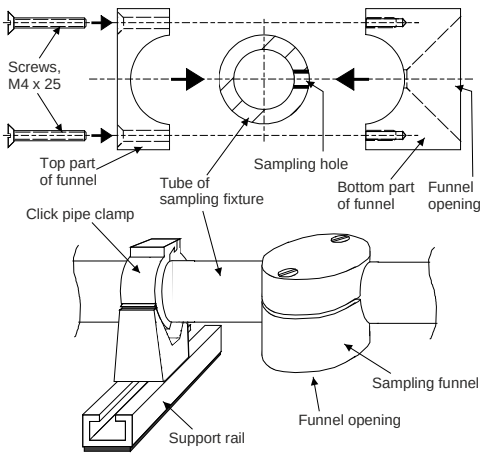

Fig. 14 Using sampling funnels

2.5.11 Mounting sampling stubs for a ceiling bushing

Possible only with plastic tubes (PVC/ABS)!

The parts required for a sampling stub for a ceiling bushing duct are shown in **Fig. 15**.

A T-piece is built into the sampling pipe at the required point.

The assembly sequence is carried out as indicated by the numbering **1** to **8**.

The sampling hole size (8) is selected based on the specification in Sec. “Planning” (T 140 421) and/or the specifications of the “ASD PipeFlow” calculation software.

Notices

- Make sure the interfaces of the flexible tube are implemented “cleanly” so that the sealing ring in the quick-release coupling is not damaged.
- When clicking the flexible tube into place, make sure the tube and the quick-release coupling are pressed firmly against each other to prevent the intake of any leakage air.
- The maximum length of the flexible tube must not exceed **1.5 m**.

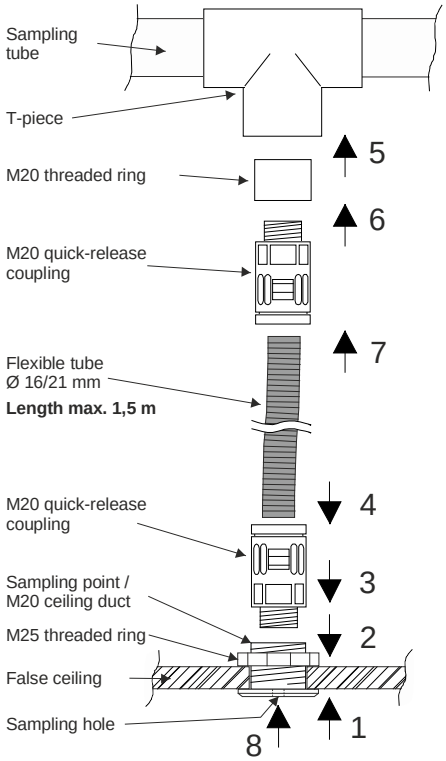

Fig. 15 Mounting the ceiling bushing

2.5.12 Mounting the dust filter unit, dirt trap box, dust retaining box, water retaining box

Applications with extremely high levels of dust and/or dirt, extreme temperature ranges and/or atmospheric humidity outside the specified limit values require the use of accessory parts as instructed by the manufacturer, e.g.:

- Dust filter unit;
- Dirt trap box;
- Dust retaining box;
- Water retaining box;
- Manual ball valve for sporadic cleaning of the sampling pipe using compressed air;
- Automatic blow-out device

Notices

The following rules must be adhered to when using accessory parts:

- The use of a dust filter unit by itself is possible.
- The water retaining box, dust retaining box and dirt trap box should always be used in conjunction with a dust filter unit.
- An automatic blow-out device should be used in combination with a dust retaining box or a dirt trap box and a dust filter unit.
- Dust filter units, dirt trap boxes, dust retaining boxes and water retaining boxes must always be mounted below the detector housing. The water retaining box and dust retaining box must be located at the lowest point (water drain). The specified minimum dimensions (0.5 m) must be adhered to.
- The mounting positions for the water retaining box, dirt trap box and dust retaining box must be observed as indicated in **Fig. 16**.

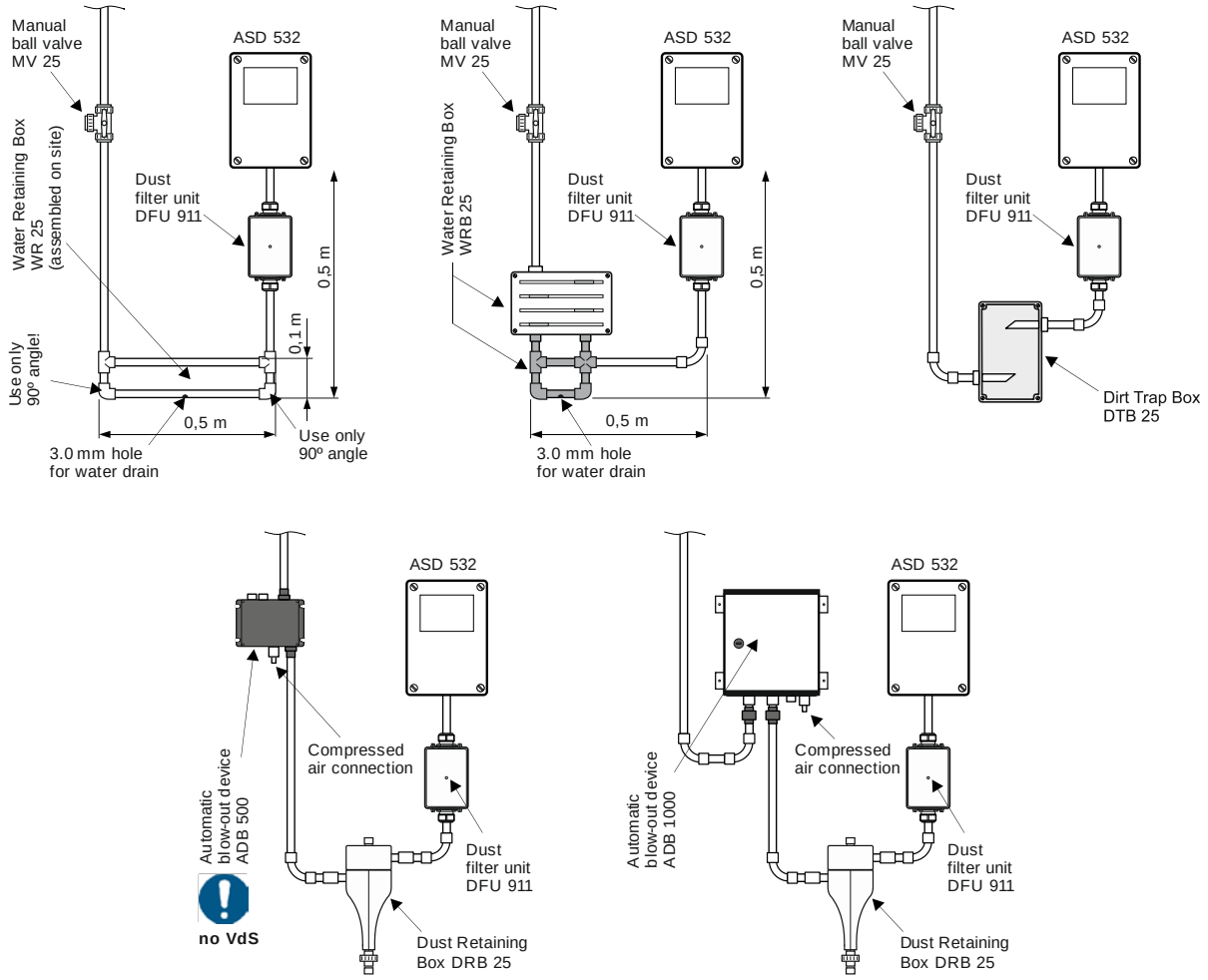

Fig. 16 Mounting accessory parts

3 Installation

3.1 Regulations

Notices

- The electrical installation is to be carried out in accordance with the applicable country-specific regulations, standards and guidelines. Likewise, the local provisions must also be observed.
- Besides country-specific regulations and guidelines, the specifications concerning the requirements for installation cables and conductor cross-sections as described in Sec. “Planning” (T 140 421) must be observed and implemented.

3.2 Cable entry

Notice

Make sure the power is disconnected for all connection and wiring work on the ASD 532.

There are three M20 cable screw unions in the detector housing for feeding in the electrical installation. If needed, an additional one M25 cable screw union can be fitted in one reserve hole (blind plug).

The cable screw unions are suitable for cables with external diameters ranging between 5 and 12 mm (M20) or 9 and 18 mm (M25).

Notices

- The device ships with the cable screw unions sealed with a dust-protection insert; remove the inserts before feeding in the cables. The dust-protection inserts merely prevent the ingress of any dust and/or dirt during the mounting of the device and do not provide any mechanical protection. Any cable screw unions that are not in use must be replaced with blind plugs (mounting set) to maintain the IP 54 protection class.
- **Use in compliance with UL 268**: When using the ASD 532 in compliance with UL 268, special **1/2“** and **3/4“** cable screw unions are to be used (customer-side). To be able to use them in the ASD map case, the existing M20 and M25 screw-junction pieces must be removed and replaced by 1/2“ M20 adapters and 3/4“ M25 adapters. The adapters are available from the manufacturer in the **AD US M-Inch** range of accessories.

3.3 Using the smoke sensor

The ASD 532 ships with the smoke sensor already fitted. It is application specific (according to required sensitivity range), purchased from the manufacturer and installed after the detector housing is mounted. See also Sec. “Smoke sensors used” (T 140 421).

Notices when deploying smoke sensors

- Always leave the smoke sensor inside its protective packaging until just before it is to be installed in the detector housing.
- Depending on the situation (e.g. if there is a long time between mounting and commissioning or if the environment is very dusty due, for example, to construction), the smoke sensor should be installed just before commissioning the ASD 532.
- Before installing the smoke sensor check that the insect protection screens are properly fitted to the smoke sensor chamber at the air inlet and outlet.
- The smoke sensor chamber must be absolutely free of any dirt and/or dust. Remove any residue resulting from mounting the detector housing.

Check the installation position when installing the smoke sensor. The connector plug of the smoke sensor must be face away from the slots of the additional modules. The anti-twist rib on the smoke sensor case prevents an incorrect installation position.

The smoke sensor is secured inside the ASD housing using the two lock clamps. Connect the ribbon cable supplied with the smoke sensor to the smoke sensor (large ribbon cable connector) and to the AMB 32 main board (small ribbon cable connector).

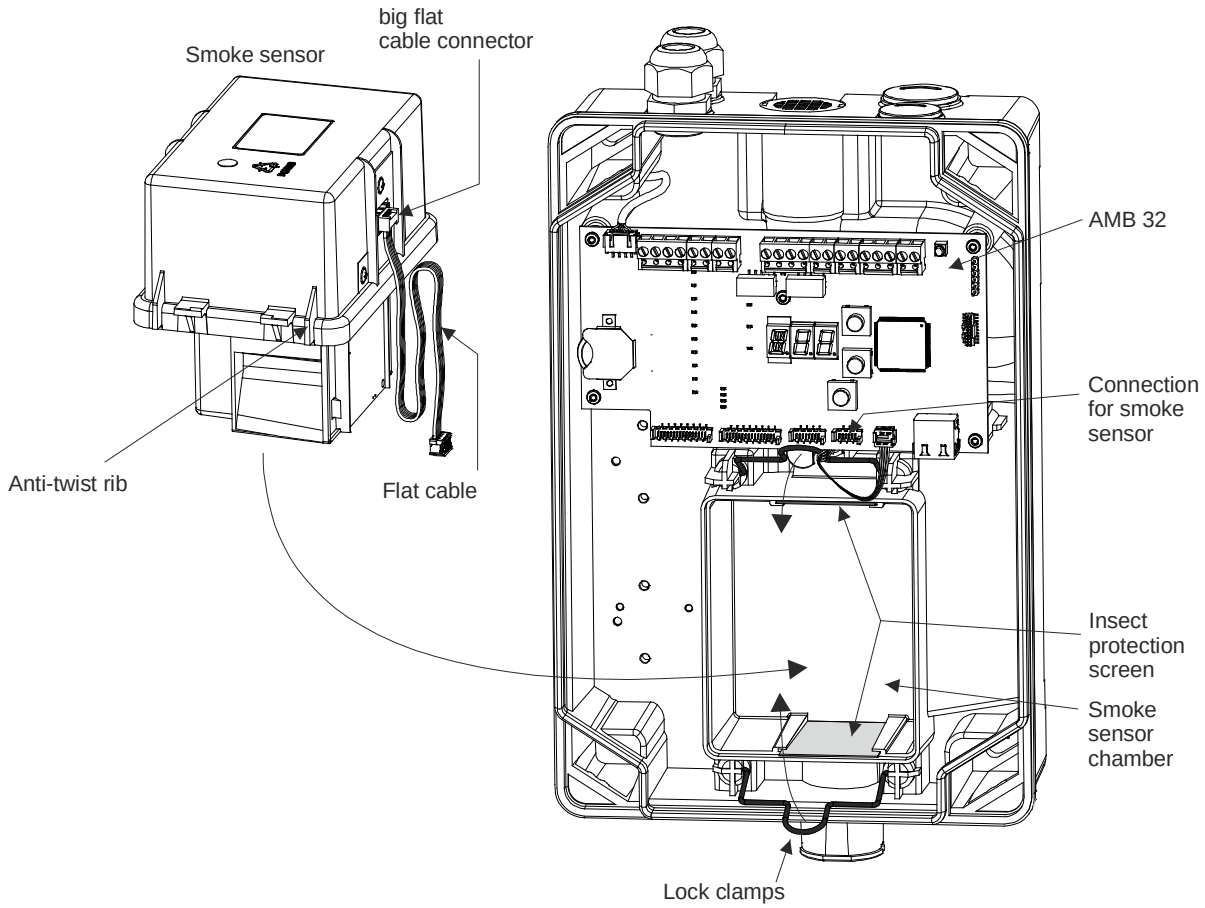

Fig. 17 Deploying the smoke sensors

3.4 Installing additional modules

There are two expansion slots for fitting the detector housing with optional additional modules. Given the modular assignment of ribbon cable connectors on the AMB 32 Main Board it is recommended to observe the arrangement shown in **Fig. 18**.

The mounting set of each module comprises a module holder, mounting screw and the connecting cable (ribbon cable) for connecting to the AMB 32. Use a **Torx screwdriver T15** to tighten the mounting screw. The module can be removed from the module holder for mounting in the detector housing and for the subsequent electrical installation.

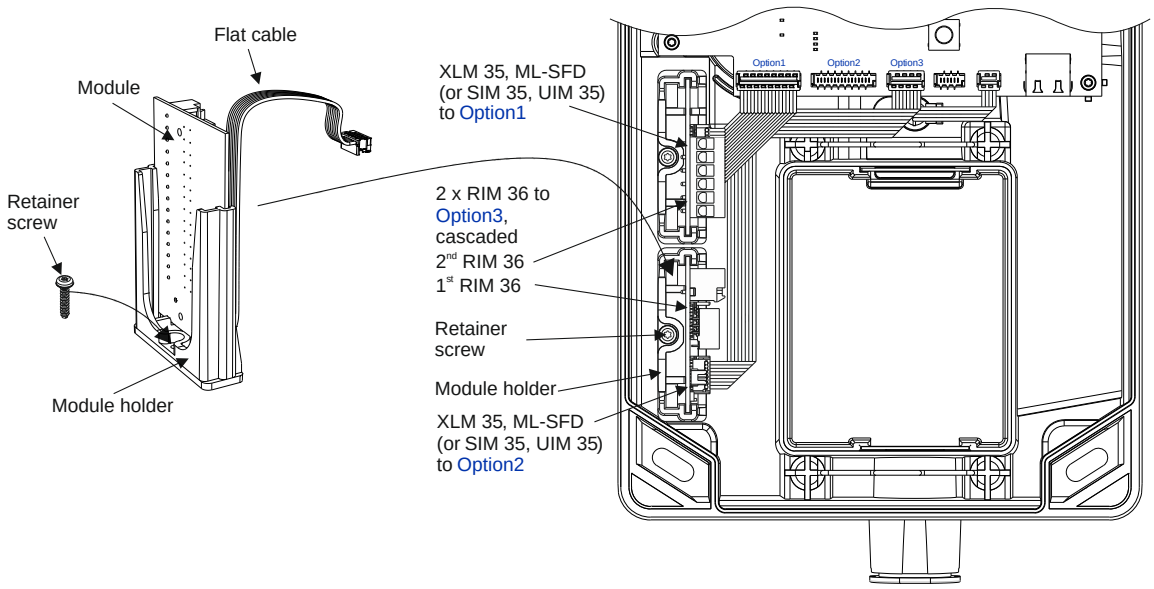

Fig. 18 Installing additional modules

Notice

The additional modules are automatically detected when the device is switched on, from which point on they are monitored and functional. To read out the SD memory card or when subsequently removing an additional module (e.g. because it is not being used), the additional modules must first be logged off via operation on the AMB 32 Main Board (***o*** switch position).

The UMS 35 universal module holder is available for installing modules other than XLM, ML-SFD, RIM, SIM or UIM. It is secured in the detector housing instead of the module holders described above and requires both expansion slots. The UMS 35 consists of an angled sheet metal plate with various fastening options for additional modules.

Notice, XLM 35, ML-SFD installation

With the installation of the use of an XLM 35 or ML-SFD, the ASD 532 meets the requirements in compliance with **EN 54-17** (short-circuit isolation). To ensure that the required identification is recognisable in compliance with EN 54-17, the supplied **identification sign** must be easily visible **outside** on the ASD housing and attached in the immediate vicinity of the ASD rating plate (same side) when the XLM 35 or ML-SFD is installed.

3.5 Electrical connection

The electrical connection is implemented by means of plug-in screw terminals. Use a **no. 1 flat-blade screwdriver** (3.5 mm) to tighten the screw terminals. Individual terminal blocks are fitted for the supply voltage, relay contacts, inputs, outputs, etc.

Notices

- Inside the detector housing the lines should be fed to the terminals using the shortest possible route. Reserve loops via the main board are to be avoided (EMC).
- **Caution**: For system monitoring – for terminals "**Alarm**" and "**Fault**", **do not use looped wire** under terminals. Break wire run to provide monitoring of connections.

3.5.1 Terminal assignment Main Board AMB 32

AMB terminal	Signal		Wiring
1	+14 to +30 VDC (UL/FM = 16.4 to 27)		Main power supply line from FACP or external according to **Fig. 19**
2	0 V		
3	+14 to +30 VDC (UL/FM = 16.4 to 27)		Redundant power supply line from FACP or external according to **Fig. 19**
4	0 V		
5	+ power supply		Connection of feedback signals according to **Fig. 26**
6	Output fault, OC (all fault events)		
7	Output Alarm, OC		
8	Rel. 1 ("NO") ①	Fault	Connection of the line according to **Fig. 23** to **Fig. 24** and specifications of the used line
9	Rel. 1 ("NC")		
10	Rel. 1 "COM" ①		
11	Rel. 2 "NO"	Alarm	
12	Rel. 2 "NC"		
13	Rel. 2 "COM"		
14	External reset input + (opto-isolator input)		Connection according to **Fig. 20** and **Fig. 22**
15	External reset input – (opto-isolator input)		
16	OEM input + (opto-isolator input) ② ③		Connection similar to **Fig. 20**
17	OEM input - (opto-isolator input) ② ③		
18	PWR-O+	+ Power supply (+14 to 30 VDC)	Accessory bus
19	PWR-O-	– Power supply (GND)	
20	Data+	RS485 connection	
21	Data-		

Notices

① The "Fault" relay has picked up in the release state ➔ contact Te. 10/8 closed, 10/9 open (ASD 532 under voltage; no fault event present).

② In some cases actuations via the OEM input may **not** comply with requirements **in accordance with EN 54-20** and may therefore only be used after consulting with the manufacturer.

③ The OEM input is **not** line monitored.

3.5.2 Terminal assignment for Line Module XLM 35 / ML-SFD

Terminal XLM	Terminal ML-SFD	Signal	Wiring
L1	**P1**	Data A	Addressable loop according to **Fig. 22** or **Fig. 25**
C1	**N1**	GND A	
G1	**S1**	Screen	
L2	**P2**	Data B	Addressable loop according to **Fig. 22** or **Fig. 25**
C2	**N2**	GND B	
G2	**S2**	Screen	

3.5.3 Terminal assignment for RIM 36 Relay Interface Module

RIM terminal		Signal ①		Wiring
1	Rel. 1	"NO"	Pre-signal 1 or freely programmable	Local info or connection to FACP input
2		"NC"		
3		"COM"		
4	Rel. 2	"NO"	Pre-signal 2 or freely programmable	
5		"NC"		
6		"COM"		
7	Rel. 3	"NO"	Pre-signal 3 or freely programmable	
8		"NC"		
9		"COM"		
10	Rel. 4	"NO"	Smoke sensor dirt or freely programmable	
11		"NC"		
12		"COM"		
13	Rel. 5	"NO"	Sampling pipe blockage or freely programmable	
14		"NC"		
15		"COM"		

Notice

① The assignment of individual or all relays can be changed with the "ASD Config" configuration software.
If two RIM 36 devices are used, the relays of the second RIM 36 are not configured with any default criteria.
The required programming must be performed using the "ASD Config" configuration software.

3.5.4 Terminal assignment of an SIM 35 Serial Interface Module

SIM terminal	Signal	Wiring / installation		
1	GND	Input	1st conductor from wire pair 2	
2	D +		1st conductor from wire pair 1	twisted
3	D –		2nd conductor from wire pair 1	
4	GND	Output	1st conductor from wire pair 2	
5	D +		1st conductor from wire pair 1	twisted
6	D –		2nd conductor from wire pair 1	

3.6 Connection variants

Notice

The connection variants are determined by the possible line and FACP technologies used. For more information on connecting alarm transmitters, line monitoring elements, etc., please contact the manufacturer and/or supplier of the fire alarm system.

In all cases the ASD 532 must have an emergency power supply (country-specific, e.g. compliant with EN 54-4).

3.6.1 Power supply

The ASD 532 must always have an emergency power supply. Depending on the output current available at the fire alarm control panel (FACP) and the number of ASD 532 units to be connected, the power supply can be provided by the FACP; alternatively, an additional power supply must be provided locally.

The supply is via terminals 1 and 2. In applications which stipulate a redundant power supply line (country-specific), it is routed to terminals 3 and 4 (**Fig. 19**).

Notices

- The supply inputs are not connected internally in the ASD and therefore cannot be used for direct forwarding to neighbouring systems.
- The terminals of the ASD 532 are designed for maximum 2.5 mm². For forwarding the power supply line to a neighbouring ASD it may therefore be necessary to install additional distributor or support terminals.

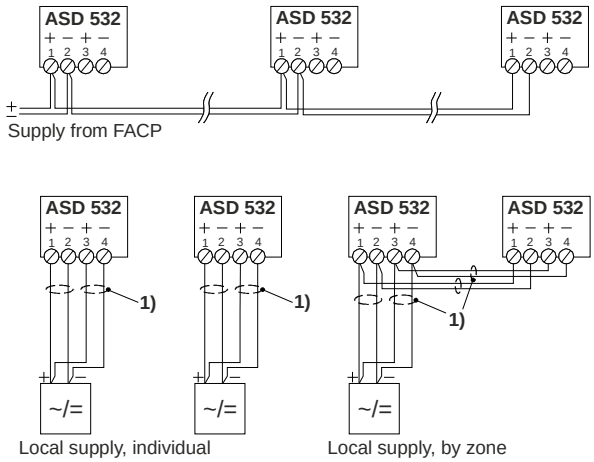

1) redundant power supply line (optional, country-specific)

Fig. 19 Types of power supply

Notice

To determine the required power supply and cable cross-section, the calculations set out in Sec. “Planning” (T 140 421) must be carried out in all cases. For applications with redundant power supply, the calculations must be performed for both power supply lines individually.

3.6.2 Reset input

The reset input is potential-free (opto-isolator) and can be actuated on both the “plus” side and the “minus” side, **Fig. 20**. The input operates in the 5 to 30 VDC range and in an impulse bandwidth of 0.5 to 10 s. Thanks to the continuous current consumption of approx. 3 mA across the entire operating range, actuation can be carried out directly via an OC output.

If a continuous signal is imposed for longer than 20 s, the ASD 532 is switched inactive, the fault relay becomes active (triggers), and the fan is switched off. Once the continuous signal is switched off, the ASD is re-armed. Switching inactive via the “Reset external” input works only if the ASD 532 is not equipped with an XLM 35 or ML-SFD.

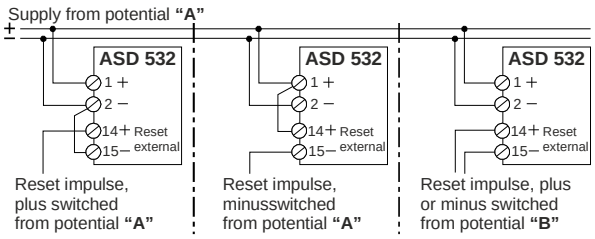

Fig. 20 Reset input

3.6.3 Control

The ASD 532 units connected to an FACP are controlled according to the detection zone mapping using the FACP states “Zone On/Off” and “Reset”. Two possibilities are available:

- Control via supply voltage (auxiliary relays in the ASD power supply line);
- Control via the “Reset external” input

3.6.3.1 Control via voltage supply by means of auxiliary relay

Depending on the location of the ASD power supply, the auxiliary relay may be placed in the FACP or directly in the ASD 532.

The auxiliary relay can be actuated in the following ways (see **Fig. 21**):

A. line plus or minus
B. SW output of the FACP
C. SW output or function of a control module

The function types described above are determined by the FACP technology used; it is therefore essential to contact the manufacturer and/or the supplier of the FACP for details before implementing.

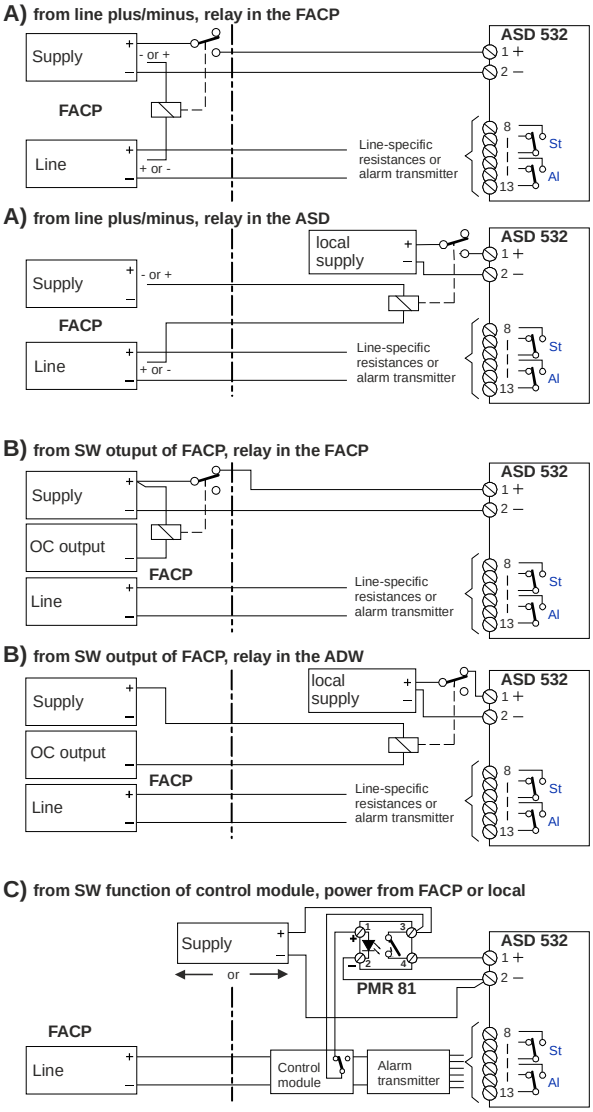

Fig. 21 Control via supply with relay

Notices

- The EMC protective elements at the input of the ASD electronics cause a brief current peak (5 A / 1 ms) when the supply voltage is applied. When using auxiliary relays with a maximum contact rating of 1 A, this may lead to the relay contact sticking. For this reason auxiliary relays with a contact load of over **1 A** should **generally** be used, e.g. PMR 81 semi-conductor relay (see **Fig. 21c)**).
- The ASD supply path routed via the auxiliary relay contact must be short-circuit-proof or routed via a fuse component (circuit-breaker card).
- When using a PMR 81 semi-conductor relay, it may be necessary to invert the actuation signal (PMR only has a normally open (NO) contact function).
- To guarantee comprehensive emergency running properties, the connection must in all cases be implemented in such a way that if there is an FACP computer failure the ASD will continue to function (reset input not actuated).

3.6.3.2 Control via “Reset external” input

The following options are available for control via the reset input (see **Fig. 22**):

A. Control via auxiliary relay from line plus

B. Control via auxiliary relay or semi-conductor relay (PMR 81) from control output (open collector)

C. Control without auxiliary relay, directly from control output (relay contact or open collector);

D. Control via addressable loop when using the XLM 35 / ML-SFD. The control is then not by means of the reset input but rather directly with the corresponding command entry via the XLM 35 / ML-SFD on the ASD 532.

The function types described above are determined by the FACP technology used; it is therefore essential to contact the manufacturer and/or the supplier of the FACP for details before implementing.

Notices

- When using a PMR 81 semi-conductor relay, it may be necessary to invert the actuation signal (PMR only has a normally open (NO) contact function).
- To guarantee comprehensive emergency running properties, the connection must **in all cases** be implemented in such a way that if there is an FACP computer failure the ASD will continue to function (reset input not actuated).
- **Caution**: When control is via the “Reset external” input, the ASD 532 is supplied with voltage even if the zone (FACP) is switched off. For this reason the power supply line to the ASD must be disconnected to carry out any repair work (e.g. unplug terminals 1 and 2 on the ASD; also 3 and 4 in the case of a redundant supply).

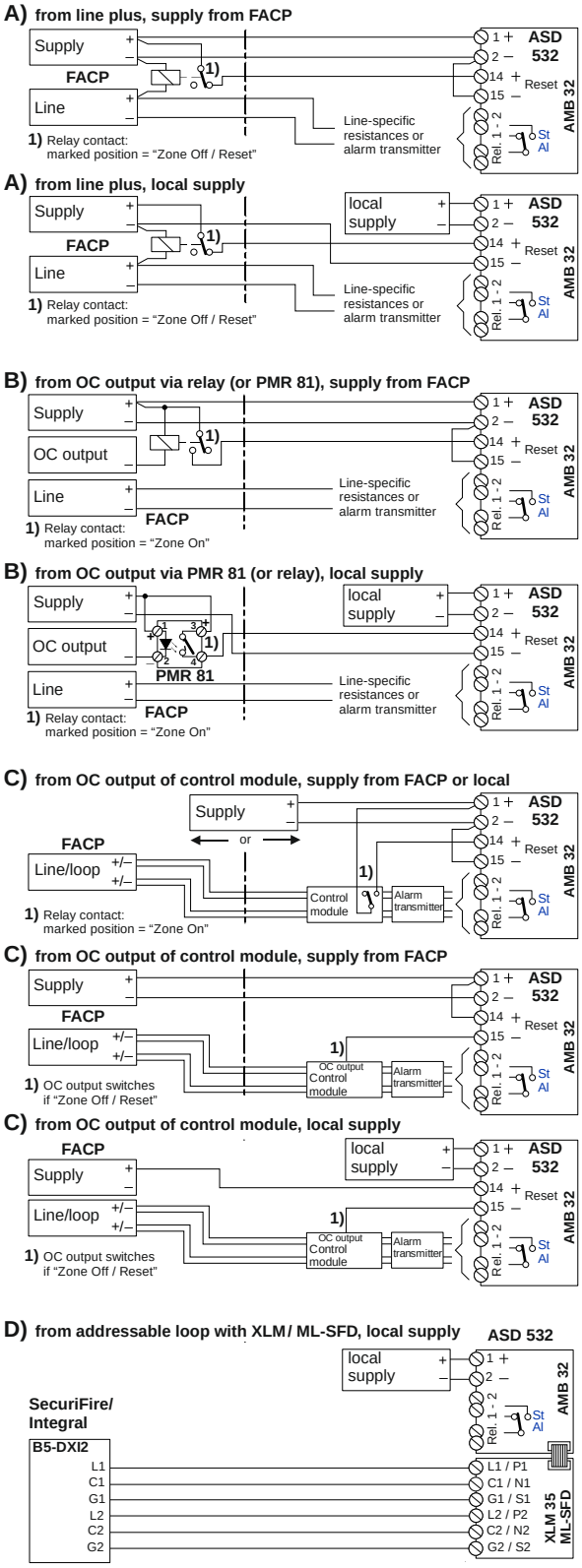

Fig. 22 Control via the “Reset external” input

3.6.4 Connection to the FACP line

Each of the following examples illustrates the control via reset input according to Sec. 3.6.3.2. If connection with the control via the voltage supply is required, the control circuit in the figures below can be implemented as described in Sec. 3.6.3.1.

3.6.4.1 Connection to zone detection via AI / St relays

For connection to zone detection lines, the control relay is usually actuated from the line plus. The precondition is that the line plus also switches for “Zone On/Off” and “Reset”.

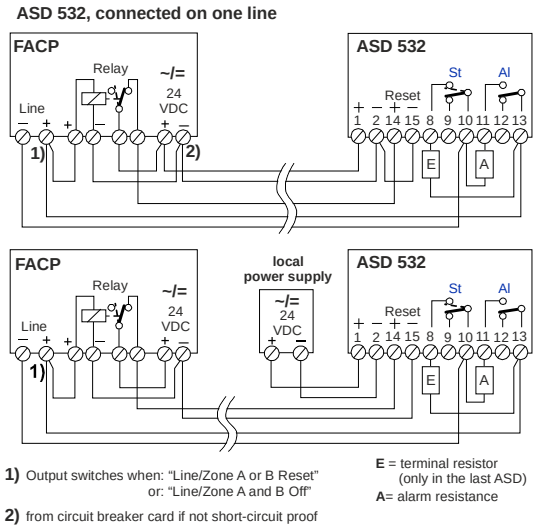

Fig. 23 Connection to zone detection

3.6.4.2 Connection to selective identification or addressable loop via AI / St relay

With line technologies such as selective identification lines and addressable loops, the control relay is actuated from a software-controlled output (output card or control module). The output is programmed via the FACP software using the “Zone Off” and “Reset” functions.

A normal relay or PMR 81 semi-conductor relay can be used as the control relay.

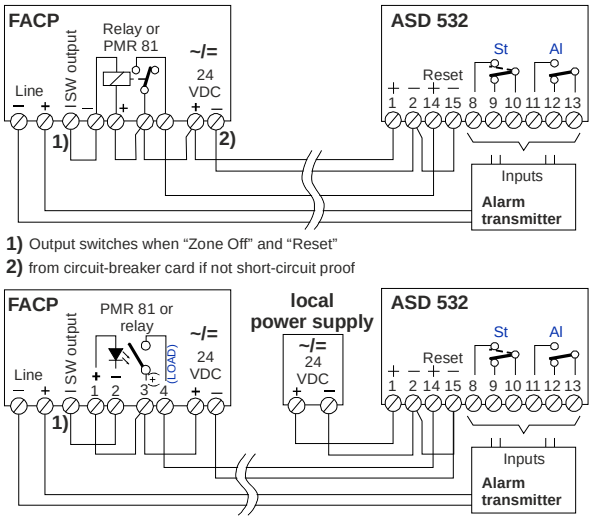

Fig. 24 Connection on selective identification or addressable loop

3.6.4.3 Connection to SecuriFire / Integral addressable loop from XLM 35 / ML-SFD

For the connection to SecuriFire/Integral addressable loop from the XLM 35 or ML-SFD no additional control relay is needed. Likewise the Al and St relays of the ASD 532 are not required. The state query and the control of the ASD 532 take place directly between the XLM 35 or ML-SFD and the addressable loop.

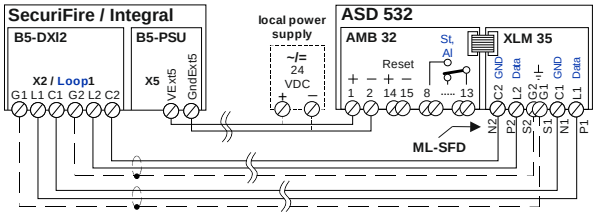

Fig. 25 Connection from XLM 35 / ML-SFD

Maximum connectible XLM 35 / ML-SFD units:
(see also notice below)

for each SecuriFire / Integral addressable loop (XLM 35)	32 units ①
for each SecuriFire / Integral addressable loop (ML-SFD)	28 units ①

① country-specific regulations and guidelines must be observed

Notices

- The installation of the SecuriFire / Integral addressable loop must be shielded.
- The connection and line routing between **XLM 35 / ML-SFD** and the SecuriFire and Integral FACP is to be carried out in accordance with **Fig. 25** (L1 to L1, C1 to C1, etc.).
- The **identification sign** (EN 54-17) supplied with the XLM 35 or ML-SFD **must** be attached outside on the ASD (next to the ASD rating plate).

3.6.5 OC outputs

The ASD criteria “Alarm” and “Fault” (all fault events) are available as OC outputs.

Parallel and feedback indicators or other consumers (e.g. relays) can be connected to the OC outputs.

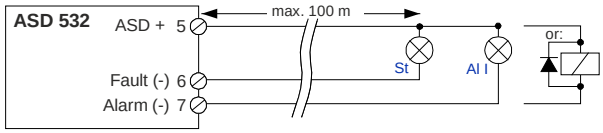

Fig. 26 Connecting the OC outputs

Notices

- When connecting inductive consumers (e.g. relays), a free-wheeling diode is to be installed directly at the consumer (**Fig. 26**).
- The outputs are 0-volt switched and have a max. loading capacity of **100 mA** per output. The dielectrical strength per output is 30 VDC. The outputs are short-circuit-proof but <u>not</u> potential-free. Connection to the outputs affects the overall power consumption of the ASD 532.

4 Article numbers and spare parts

4.1 Detector housings and accessories

Designation	Article no.
Aspirating Smoke Detector ASD 532-1	11-2000003-01-XX
Smoke sensor SSD 532-1, 0.5%/m to 10%/m	11-2000004-01-XX
Smoke sensor SSD 532-2, 0.1%/m to 10%/m	11-2000004-02-XX
Smoke sensor SSD 532-3, 0.02%/m to 10%/m	11-2000004-03-XX
SecuriLine eXtended Module XLM 35 incl. mounting set	11-2200003-01-XX
M-Line module ML-SFD incl. mounting set	11-2200015-01-XX
RIM 36 Relay Interface Module incl. mounting set	11-2200005-01-XX
SIM 35 Serial Interface Module incl. mounting set	11-2200000-01-XX
SMM 535 Serial Master Module	11-2200001-01-XX
SD memory card (industrial version)	11-4000007-01-XX
Printed circuit board AMB 32 main board	11-2200013-01-XX
Aspirating Fan Unit AFU 32, complete	11-2200008-01-XX
Air Flow Sensor AFS 32	11-2200007-01-XX
Insect Protection Screen IPS 35 (set of 2)	11-2300012-01-XX
Lithium battery	11-4000002-01-XX
Cable screw union M20 (set of 10)	11-4000003-01-XX
Cable screw union M25 (set of 10)	11-4000004-01-XX
Adapters for US cable screw unions AD US M-Inch	11-2300029-01-XX
UMS 35 Universal Module Support	4301252.0101

4.2 Sampling pipe and accessories

The article numbers of all the available parts for the sampling pipe (tubes, fittings, etc.) are listed in a separate document (T 131 194).

5 Technical data

Type			ASD 532	
Supply voltage range			14 to 30 (**UL/FM = 16.4 to 27**)	VDC
Max. power consumption, measured in			typical	
Fan speed level III and at ➔		14 VDC ①	24 VDC	
ASD 532-1	Quiescent/fault	approx. 170	approx. 100	mA
	Alarm	approx. 200	approx. 115	mA
additionally with 1x RIM 36 (all relays triggered)		approx. 30	approx. 15	mA
additionally with 2x RIM 36 (all relays triggered)		approx. 60	approx. 30	mA
additionally with XLM 35 / ML-SFD		approx. 15	approx. 5	mA
additionally with SIM 35		approx. 15	approx. 5	mA
SMM 535 (not from ASD but rather from PC via USB connection)			max. 100	mA
Switch-on current peak ② (caused by EMC protection elements on the ASD supply input)			approx. 5 A for max. 1 mx	
Sampling pipe length			see T 140 421	
Sampling pipe diam., typical (inner/outer)			Ø 20 / 25	mm
Max. number of sampling holes			see T 140 421	
Sampling hole diameter			Ø 2 / 2.5 / 3 / 3.5 / 4 / 4.5 / 5 / 5.5 / 6 / 6.5 / 7	mm
Response range			EN 54-20, class A, B, C	
Protection type compliant with IEC 60529 / EN 60529			54	IP
Ambient conditions compliant with IEC 60721-3-3 / EN 60721-3-3			3K5 / 3Z1	class
Extended ambient conditions:				
• Detector housing temperature range			–20 – +60 (**UL max. +40**)	°C
• Sampling pipe temperature range			–20 – +60 ③	°C
• Max. permissible temperature fluctuation in detector housing and sampling pipe operation			20 ③	°C
• Max. permissible storage temperature for detector housing (without condensation)			–30 – +70	°C
• Ambient pressure difference between detector housing and sampling pipe (sampling holes)			must be identical	
• Humidity ambient condition for detector housing (transient without condensation)			95 ③	% rel. h
• Humidity ambient condition (continuous)			70 ③	% rel. h
Max. loading capacity, relay contact			50 (**UL max. 30**)	VDC
			1	A
			30	W
Max. loading capacity per OC output (dielectric strength 30 VDC)			100	mA
Plug-in terminals			2.5	mm²
Cable entry for cable Ø			Ø 5 – 12 (M20) / Ø 9 – 18 (M25)	mm
Sound pressure level for fan speed level I / II / III			25 / 31 / 39	dB (A) / 1 m
Housing	material		ABS blend, UL 94-V0	
	colour		grey 280 70 05 / anthracite violet 300 20 05	RAL
Approvals			EN 54-20 / EN 54-27 / FM 3230 – 3250 / UL 268 7th Ed / UL 268A 4th Ed / ULC-S529 4th Ed	
VdS approval			G 215101	
Dimensions	ASD 532-1 (W x H x D)		195 x 333 x 140	mm
Weight	ASD 532-1 (incl. SSD 532-x)		2,000	g

Notices

① Power consumption at maximum permitted voltage drop in the electrical installation (decisive value for calculating the conductor cross-section).

② May cause the protective circuit to trigger immediately in the case of power supplies with overload protective circuits (primarily in devices with no emergency power supply and output current of < 1.5 A).

③ Lower or higher temperature ranges are also possible subject to consultation with the manufacturer. The manufacturer must be consulted if the device is used in the condensation range.

6 List of figures

Fig. 1 Detector housing dimensioned drawing and drilling plan 10
Fig. 2 Open, closing and securing the detector housing 13
Fig. 3 Mounting position and pipe entries on the detector housing 14
Fig. 4 Removing the air outlet pipe plug 15
Fig. 5 Turning the labelling strips 15
Fig. 6 Cutting the tubes 18
Fig. 7 Assembling the tubes 18
Fig. 8 Vertical sampling pipe 18
Fig. 9 90° bend, branching point 18
Fig. 10 Screw-free fastening of a sampling fixture 19
Fig. 11 Transition from fittings to flexible tube 20
Fig. 12 Creating the sampling holes 21
Fig. 13 Mounting clips 21
Fig. 14 Using sampling funnels 21
Fig. 15 Mounting the ceiling bushing 22
Fig. 16 Mounting accessory parts 23
Fig. 17 Deploying the smoke sensors 25
Fig. 18 Installing additional modules 26
Fig. 19 Types of power supply 29
Fig. 20 Reset input 29
Fig. 21 Control via supply with relay 30
Fig. 22 Control via the “Reset external” input 31
Fig. 23 Connection to zone detection 32
Fig. 24 Connection on selective identification or addressable loop 32
Fig. 25 Connection from XLM 35 / ML-SFD 33
Fig. 26 Connecting the OC outputs 33

Document history

First edition Date 15.10.2015

Index “a” Date 31.10.2016

Most important changes compared with previous issue:

Section / Fig.	New (n) / changed (c) / deleted (d)		What / Reason
3.2	n	Notice supplemented: for UL, replacement of the screw-junction pieces with AD US M-Inch adapter	New UL use
3.4 / 3.6.4.3	n	Notice about “EN 54-17” identification sign	Addition
3.5	n	Notice supplemented: do not use looped wire	New UL use
3.5.2	n	Supply voltage range for UL specified	New UL use
	n	Activation of the day/night control via OEM input described.	Addition, correction
3.6	c	Text correction “country-specific e.g. EN 54-4”	Correction
3.6.2 / Fig. 20	c	Terminal designation “reset input” corrected	Correction
3.6.4.3	c	Number of XLM on addressable loop	Correction
4.1	n	New accessory: AD US M-Inch	New UL use
5	n	Note about UL use concerning supply voltage range, temperature range, relay contact, approvals	New UL use

Index “b” Date 30.04.2018

Most important changes compared with previous issue:

Section / Fig.	New (n) / changed (c) / deleted (d)		What / Reason
2.5.12 / Fig. 16	n	DFU 911 duster filter unit integrated	Extension
3.5.1	c	Notice about prioritisation of the function day/night control removed	Correction
3.5.3	c	Text corrections (“Sampling tube” → “Sampling pipe”)	Correction
3.6.5	c	OC outputs short-circuit-proof	Supplemental text, correction
5	c	“Sound pressure level” instead of “noise level”, value specification corrected	Correction

Index “c” Date 20.06.2019

Most important changes compared with previous issue:

Section / Fig.	New (n) / changed (c) / deleted (d)		What / Reason
2.4	c	Air recirculation, maximal 20 m omitted	Correction/expansion
5	c	RIM current consumption (all relays triggered)	Addition
	c	Name of standard for protection type/ambient conditions	Correction

Index “d” Date 13.12.2021

Most important changes compared with previous issue:

Section / Fig.	New (n) / changed (c) / deleted (d)		What / Reason
1.1 / 1.3 / 3.4 / Fig. 18 / 3.5.2 / 3.6.2 / 3.6.3.2 / Fig. 22 / 3.6.4.3 / Fig. 25 / 4.1 / 5	n	Inclusion of ML-SFD additional module	Extension
1.1 / 1.3 / 3.4 / Fig. 18	n	Inclusion of UIM additional module	Extension
1.1 / 1.3	n	Notice about FidesNet	Addition
2.4.2 / 2.5.12 / Fig. 16	c	Filter FBL, FBX omitted	Correction
2.5.5 / 2.5.6 / Fig. 8 / Fig. 9	c	“Clamp” omitted (pipe clamp)	Correction
Fig. 16	c	New ADBs (instead of ADB 01A/02)	Correction / addition
5	n	Addition of the VdS G number	Addition