ModuLaser Modular Aspirating Smoke Detector Installation Manual

P/N 04-4001-501-1003-13 • REV 013 • 19MAY26

Copyright

© 2026 Kidde Global Solutions. All rights reserved.

Trademarks and patents

ModuLaser is a trademark of Kidde Fire Protection LLC.

Other trade names used in this document may be trademarks or registered trademarks of the manufacturers or vendors of the respective products.

Manufacturer

KGS Electronics Sp. z.o.o.,
Ul. Kolejowa 24, 39-100 Ropczyce, Poland.

Authorized EU manufacturing representative:
KGS Fire & Security B.V., Kelvinstraat 7, NL-6003 DH, Weert, The Netherlands.

Firmware compatibility

For detectors and display modules with firmware version 1.4 or later.

Conformity

European Union directives

2014/30/EU (EMC Directive):This device is in compliance with the essential requirements and other relevant provisions of Directive 2014/30/EU.

2012/19/EU (WEEE Directive): Products marked with this symbol cannot be disposed of as unsorted municipal waste in the European Union. For proper recycling, return this product to your local supplier upon the purchase of equivalent new equipment, or dispose of it at designated collection points. For more information see: recyclethis.info.

IEC 60825-1 This product is a Class I Laser product. The unit incorporates a Class 3B embedded laser which must not be removed from the detector.

Contact information and product documentation

For contact information or to download the latest product documentation, visit firesecurityproducts.com.

Content

Important information ii

Chapter 1 **Introduction 1**
System overview 2
Module overview 5

Chapter 2 **Installation 11**
Electrical safety 12
Installation 12
Connections 20

Chapter 3 **Configuration and Commissioning 37**
Introduction 38
Access level 1 user operation 45
Access level 2 user operation and configuration 45
Access level 3 user operation and configuration 59
Access level 4 user operation and configuration 82
Commissioning 86

Chapter 4 **Maintenance and troubleshooting 93**
Maintenance 94
Troubleshooting 97

Chapter 5 **Technical specifications 101**

Appendix A **APIC installation 105**

Appendix B **Regulatory information 107**

Index 110

Important information

Introduction

This is the installation and operation manual for the ModuLaser Modular Aspirating Smoke Detector. Read these instructions and all related documentation entirely before installing or operating this product.

Product compatibility

Products compatible with the ModuLaser Modular Aspirating Smoke Detector are listed in the product compatibility list. Only those products specified in the compatibility list are guaranteed to be compatible.

To download the latest product compatibility list, visit firesecurityproducts.com.

Firmware compatibility

Information in this document covers ModuLaser detectors and display modules with firmware version 1.4 or later.

This document must not be used as a guide for installation, configuration, or operation of detectors and display modules with an earlier firmware version.

To ensure full compatibility, we recommend that all modules in a network are updated to firmware version 1.4 if any module in the network has firmware version 1.4 (or later).

To check the firmware version of a module, open the Device Settings menu and select the module you want to view.

Limitation of liability

To the maximum extent permitted by applicable law, in no event will KGS Fire & Security be liable for any lost profits or business opportunities, loss of use, business interruption, loss of data, or any other indirect, special, incidental, or consequential damages under any theory of liability, whether based in contract, tort, negligence, product liability, or otherwise. Because some jurisdictions do not allow the exclusion or limitation of liability for consequential or incidental damages the preceding limitation may not apply to you. In any event the total liability of KGS Fire & Security shall not exceed the purchase price of the product. The foregoing limitation will apply to the maximum extent permitted by applicable law, regardless of whether KGS Fire & Security has been advised of the possibility of such damages and regardless of whether any remedy fails of its essential purpose.

Installation in accordance with this manual, applicable codes, and the instructions of the authority having jurisdiction is mandatory.

While every precaution has been taken during the preparation of this manual to ensure the accuracy of its contents, KGS Fire & Security assumes no responsibility for errors or omissions.

Product warnings and disclaimers

These products are intended for sale to and installation by qualified professionals. KGS Fire & Security cannot provide any assurance that any person or entity buying its products, including any “authorized dealer” or “authorized reseller”, is properly trained or experienced to correctly install fire and security related products.

For more information on warranty disclaimers and product safety information, please check https://firesecurityproducts.com/policy/product-warning/ or scan the QR code:

Advisory messages

Advisory messages alert you to conditions or practices that can cause unwanted results. The advisory messages used in this document are shown and described below.

WARNING: Warning messages advise you of hazards that could result in injury or loss of life. They tell you which actions to take or to avoid in order to prevent injury or loss of life.

Caution: Caution messages advise you of possible equipment damage. They tell you which actions to take or to avoid in order to prevent damage.

Note: Note messages advise you of the possible loss of time or effort. They describe how to avoid the loss. Notes are also used to point out important information that you should read.

Chapter 1
Introduction

Summary

This chapter provides an introduction to your detector, the main controls, and the indicators.

Content

System overview 2
- Introduction 2
- Clusters 3
- Connectivity 3
- ClassiFire 3
- Software 4

Module overview 5
- Display modules 5
- Detector module 7
- TFT display, controls, and indicators 8

System overview

Introduction

The ModuLaser Modular Aspirating Smoke Detector (ASD) is a highly sophisticated next generation high sensitivity smoke detection system that provides all the benefits of air sampling high sensitivity smoke detection, including very early warning.

The system comprises the following:

- A backplane
- A minimum, standard, or command display module
- A detector module

See “Module overview” on page 5 for more information on each module.

Figure 1: Display and detector modules

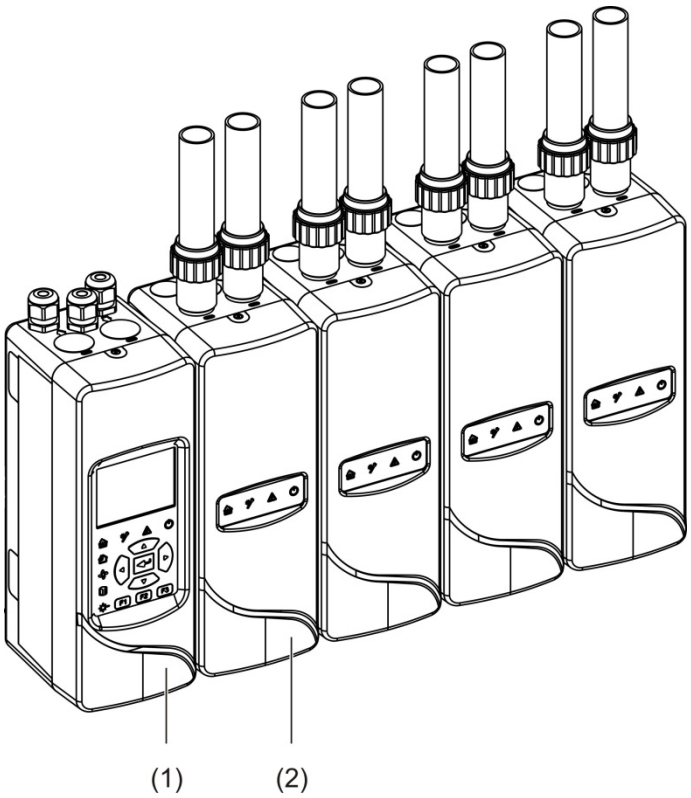

1. Display module
2. Detector module

Clusters

Each ModuLaser high sensitivity smoke detection system consists of a group of modules known as a cluster.

A cluster consists of one minimum or standard display module and from one (minimum) to eight (maximum) detector modules.

Caution: A command display module cannot replace or substitute a minimum or standard display module in a cluster configuration.

The display module is connected to the detector modules via the SenseNET+ RS-485 interface. The display module can be positioned anywhere within the cluster.

The display module and up to four detector modules can be installed in a single location (non-distributed cluster) or in separate locations (distributed cluster). Additional detector modules in the same cluster must be installed in a separate location. See “Connecting modules” on page 21 for more information on cluster connections.

Each device in a cluster is identified by a unique 7-bit address in the range 1 to 127. Multiple clusters can be connected to create a SenseNET network.

Connectivity

The following network interfaces are used:

- An APIC card is used for communication between the aspirating smoke detector and a fire alarm control panel via an addressable loop.
- SenseNET+ is used for communication between display modules and detector modules in the same cluster.
- SenseNET is used for communication between a command display module, multiple ModuLaser clusters, and other compatible ASD units.

ClassiFire

ClassiFire is the patented artificial intelligence system for aspirating smoke detectors that continually monitors the environment and internal contamination and automatically adjusts sensitivity to the optimum level.

ClassiFire automatically adjusts sensitivity to suit day/night levels with no need for external input.

ClassiFire automatically sets up the detector to the normal working environment so the detector sensitivity is optimized for its surroundings.

The ClassiFire automatic calibration process is as follows:

1. FastLearn: This stage lasts approximately 15 minutes. During FastLearn the detector is not fully operational (accurate detection is not guaranteed).
2. Intermediate learn: This stage lasts approximately 24 hours. During intermediate learn the detector is operational but is still fine tuning the detection algorithm.
3. Normal: Normal indicates that initial environmental learning has ended and that the detector is operating normally.

Note: Demo mode skips the intermediate learn mode and jumps from FastLearn to normal mode. While active, Demo mode is indicated by the Warning LED and on the display module LCD.

Software

The following software applications are available:

- **PipeCAD:** Models and verifies the performance of the pipe network design. All pipework designs **must** be validated using PipeCAD.
- **Remote:** Configures modules during installation and during system maintenance.

Contact your local distributor for more details on these applications.

Module overview

The product range includes three display modules and a detector module.

Note: Display modules and detector modules also incorporate a backplane (for inputs, outputs, and field wiring, etc.). See Chapter 2 “Installation” on page 11 for more information on the backplane.

Figure 2: Module overview

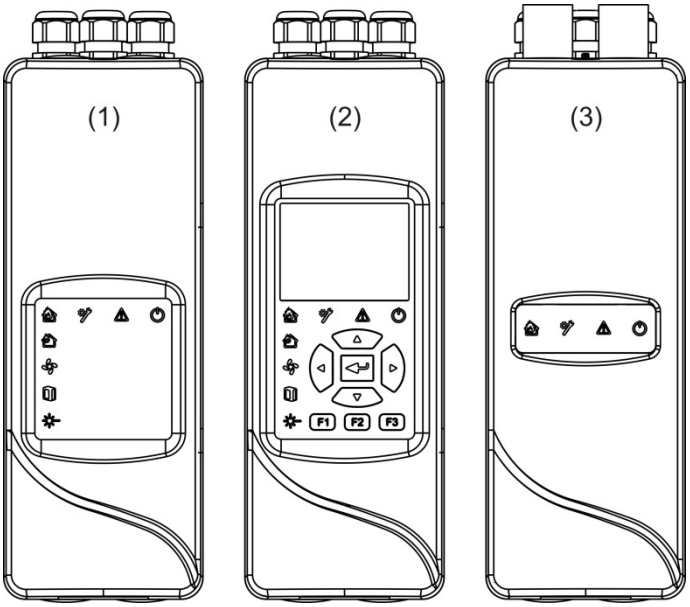

1. Minimum display module
2. Standard or command display module
3. Detector module

Display modules

The following display modules are available.

Minimum display module

The minimum display module provides LED status indicators only – it has no TFT display or user controls. LED status indicators display the status of detector modules in the same cluster.

The module provides connections to integrate the cluster into a SenseNET network. A PC connection is provided for configuring and monitoring the module and associated detector modules.

Standard display module

The standard display module provides LED status indicators, as well as a colour TFT display and user controls. LED status indicators display the status of detector modules in the same cluster. The TFT display provides additional status information and configuration menus.

The module provides connections to integrate the cluster into a SenseNET network. User controls and a PC connection are provided for configuring and monitoring the module and associated detector modules.

Command display module

The command display module provides LED status indicators, as well as a colour TFT display and user controls.

The command display module is used as a central control and monitoring point for detectors in a SenseNET network. The command display module is compatible with ModuLaser clusters and legacy ASD devices compatible with SenseNET.

User controls and a PC connection are provided for configuring and monitoring any device connected to the SenseNET network.

Figure 3: Display module LED indicators

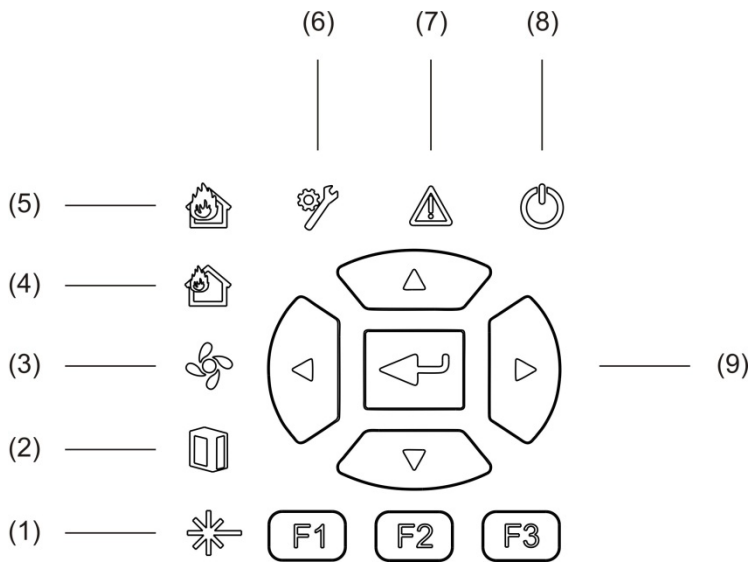

1. Laser fault LED
2. Filter fault LED
3. Flow fault LED
4. Prealarm LED
5. Fire alarm LED
6. General fault LED
7. Warning LED
8. Power LED
9. Navigation and configuration controls

Note: The minimum display module does not include the navigation and configuration controls.

Display module interfacing

All display modules provide the following connectors:

- USB type A (host)
- USB type B (device)
- APIC
- Ethernet

Detector module

The detector module is an aspirating smoke detector and must be used with either a minimum or standard display module. It consists of a fan, a dust filter, and a laser head with the corresponding sensors to measure air flow, temperature, and obscuration.

The detector module uses the ClassiFire algorithms to determine alarm conditions and keeps a record of event logs and samples.

Up to eight detector modules can be connected to a minimum or standard display module to form a cluster.

Figure 4: Detector module LED indicators

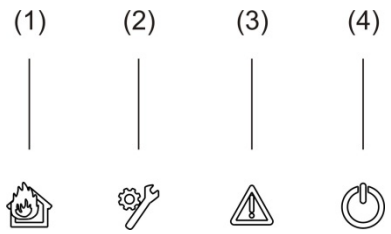

1. Prealarm and Fire alarm LED
2. General fault LED
3. Warning LED
4. Power LED

TFT display, controls, and indicators

TFT display and controls

The TFT display and controls are shown below.

Figure 5: TFT display and controls

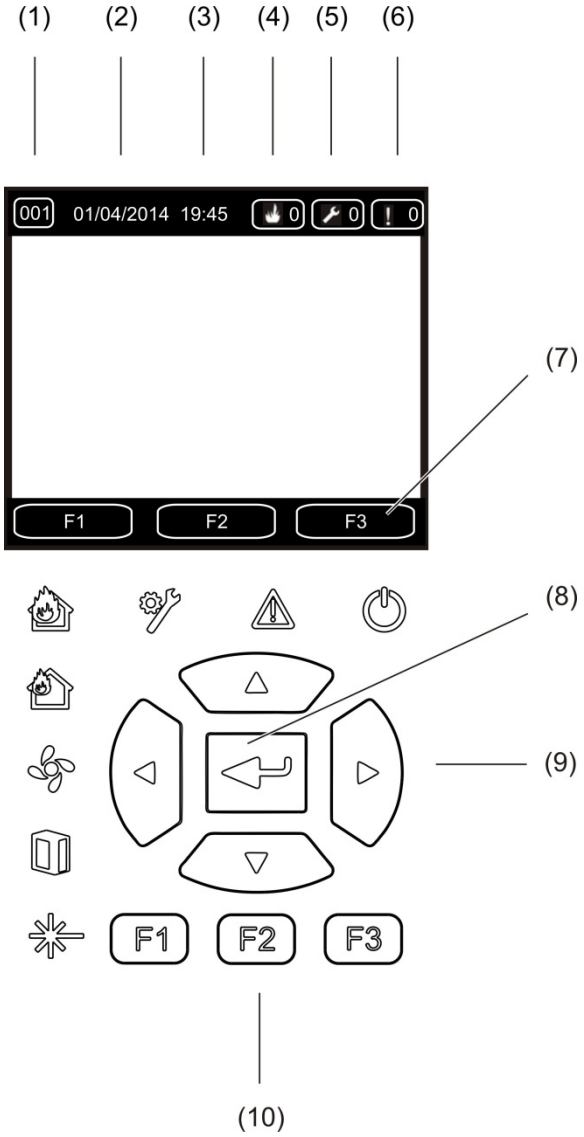

1. Address
2. System date (home screen only)
3. System time (home screen only)
4. Current alarm counter
5. Current fault counter
6. Current warning counter
7. F1, F2, and F3 TFT display soft keys (linked to F1, F2, and F3 TFT buttons)
8. Enter button
9. Navigation controls (up, down, left, right)
10. F1, F2, and F3 buttons (linked to F1, F2, and F3 TFT display soft keys)

Notes:

If configuring a detector, the address displayed is the detector address. If not, it is the display address.

The minimum display module does not include the TFT display, Enter button, navigation controls, or F1-F3 function buttons shown above.

LED indications

The LED indications are shown below.

Table 1: LED indications

LED	Colour	Indication	Description
	Yellow	Laser fault [1]	A steady LED indicates a laser fault in one or more detector modules in the cluster (minimum or standard display) or network (command display).
	Yellow	Filter fault [1]	A steady LED indicates a filter fault in one or more detector modules in the cluster (minimum or standard display) or network (command display).
	Yellow	Flow fault [1]	A steady LED indicates a flow fault or a fan fault in one or more detector modules in the cluster (minimum or standard display) or network (command display).
	Red	Prealarm [1]	A steady LED indicates a prealarm condition in one or more detector modules in the cluster (minimum or standard display) or network (command display).
	Red	Fire alarm	A steady LED on a display module indicates a fire alarm condition in one or more detector modules in the cluster (minimum or standard display) or network (command display). A steady LED on a detector module indicates a fire alarm condition for the detector. A flashing LED on a detector module indicates a prealarm condition for the detector.
	Yellow	General fault	A steady LED on a display module indicates a general fault condition in one or more modules in the cluster (minimum or standard display) or network (command display). A steady LED on a detector module indicates a general fault condition for the detector.

LED	Colour	Indication	Description
	Yellow	Warning	A steady or flashing LED indicates the following: A steady LED indicates that detection is aborted due to a fault (detector cover removed, fan motor, filter removed, or critical temperature), that there is a flow high/low range fault, that the module is disabled, or that the module is in power save mode. A fast flashing LED indicates that at least one detector module is in FastLearn mode, that the module is starting up, or that pipe calibration is in process. A slow flashing LED indicates that one or more devices or features are in test mode or that a detector is in demo mode.
	Green	Power	A steady LED indicates that the module is powered up correctly.

[1] Display modules only.

Note: If alarms or faults are latched, then an alarm or fault indication remains active until a system reset, even if the condition that caused the indication has ended. If alarms or faults are not latched, the indication disappears when the corresponding condition ends.

Chapter 2
Installation

Summary

This chapter provides detailed installation and connection information for your detector.

Caution: This product must be installed and maintained by qualified personnel adhering to all local or national installation requirements and any other applicable regulations.

Content

Electrical safety 12
Installation 12
- Overview 12
- Module and PCB layout 14
- Backplane installation 17

Connections 20
- Recommended cables 20
- Connecting modules 21
- Connecting pipes 32
- Connecting to a PC 34

Electrical safety

WARNING: Electrocution hazard. To avoid personal injury or death from electrocution, remove all sources of power and allow stored energy to discharge before installing or removing equipment.

Caution: Equipment damage hazard. This product is sensitive to electrostatic discharge (ESD). To avoid damage, follow accepted ESD handling procedures.

Installation

Overview

To install the detection system, follow these steps:

1. Fix the backplane to the wall.

   See “Installing the backplane” on page 17.
2. Connect all field wiring to the backplane.

   See “Connections” on page 20.
3. Place the display or detector module (without the cover) onto the backplane.

   See “Installing the display and detector modules” on page 31.
4. Install piping.

   See “Connecting pipes” on page 32.
5. Place the front cover onto the display or detector module.

General guidelines

Follow these general guidelines to ensure correct placement, connection, and configuration of your product.

Table 2: Installation guidelines

DO	DON’T
DO ensure that the power and signal cables are correctly connected before powering up. Incorrect connections may damage the module.	DON’T drop the detector or display modules.
DO ensure that an appropriate cable is used for interconnection.	DON’T install detector and display modules in damp or exposed areas.
DO ensure that all screws for wiring connections are firmly tightened.	DON’T remove or connect PCBs when the module is powered up.
DO place sampling points so that the detector module is able to detect smoke at the earliest opportunity.	DON’T reuse dust filter cartridges once they are removed.
DO ensure that the detector module exhaust is not impeded and is in an area with the same atmospheric pressure as the sample pipes (either by placing the detector module physically in the protected area or by leading a pipe from the detector module exhaust to the protected area).	DON’T attempt to adjust or alter detector settings other than via the user-programmable functions.
DO ensure that the ambient conditions (humidity, temperature) of the protected area are suitable for the module.	DON’T place the modules close to any equipment that may generate high radio frequency levels (such as radio alarms) or units generating high levels of electrical energy (such as large electric motors or generators).
DO set the appropriate ClassiFire alarm factor for the area to be protected.	DON’T install the module in hard to reach areas or so close to other equipment that access and maintenance of the module is difficult.
DO set the appropriate alarm level for the area to be protected.	DON’T use excessive force when fitting sampling pipes (this may damage the detector module).
DO set the appropriate fan speed for the area to be protected.	DON’T overtighten the mounting screws.
DO set the module addresses correctly to avoid duplicate addresses.	DON’T introduce any external elements (fingers, fragments, etc.) into the inside of the module or the inlet/outlet once it is operational.
DO ensure that the display and detector modules are secured to the backplane.	
DO ensure that all front covers are secured to the modules.	
DO use suitable external filtering to protect the detector module in areas with high levels of dirt or dust (otherwise contamination may impact the performance of the detector).	
DO replace the detector if the detector fan makes excessive noise or vibrates.	

Module and PCB layout

Backplane

The backplane is used to distribute power and communications to all modules in the cluster. It also provides connections for inputs, outputs, and to legacy devices. All field wiring is connected to the backplane via the cable knockouts on the top, bottom, or back of the housing.

Figure 6: Backplane layout

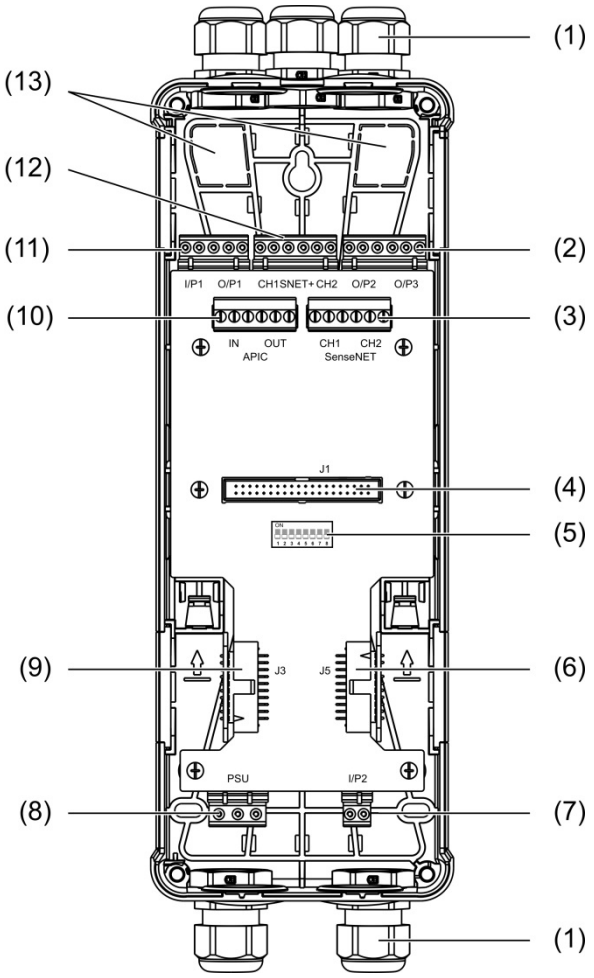

1. Cable glands (not supplied)
2. O/P2 and O/P3 output connectors
3. CH1 and CH2 SenseNET connectors for bus or loop configuration
4. J1 display and detector module connector
5. Address DIP switch
6. J5 SenseNET+ connector for adjacent backplanes
7. I/P2 input connector
8. Power supply connector
9. J3 SenseNET+ connector for adjacent backplanes
10. APIC connector (used for connecting an addressable loop)
11. I/P1 input and O/P1 output connectors
12. SenseNET+ connectors for bus or loop configuration
13. Rear cable knockouts

Note: The SenseNET and APIC connectors are only used in display modules.

Display module

Figure 7: Display module layout

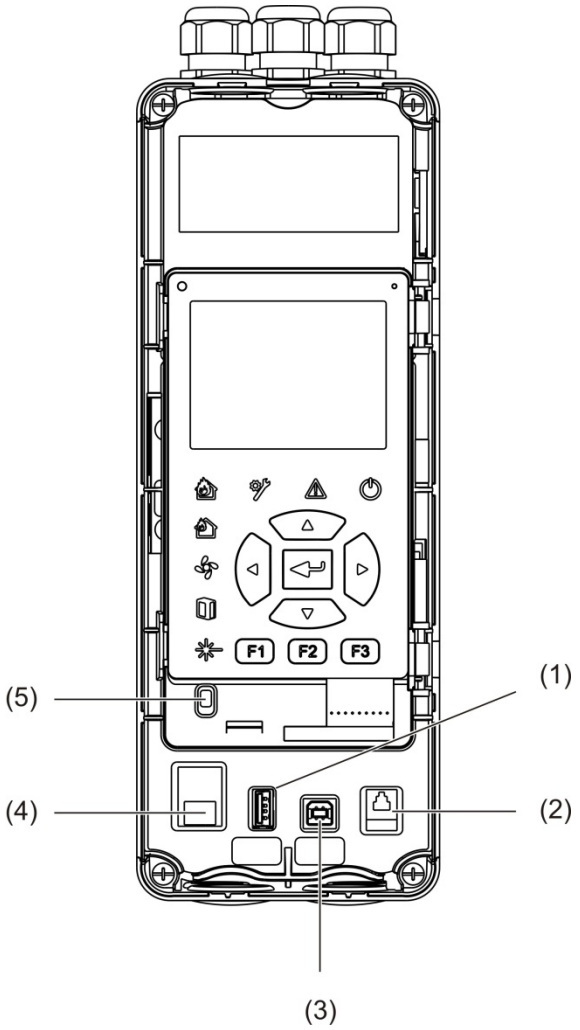

1. USB type A connector
2. RJ11 connector (see note below)
3. USB type B connector
4. Ethernet connector
5. Cover sensor

Note: RJ11 connections are not supported at this time.

Detector module

Figure 8: Detector module layout

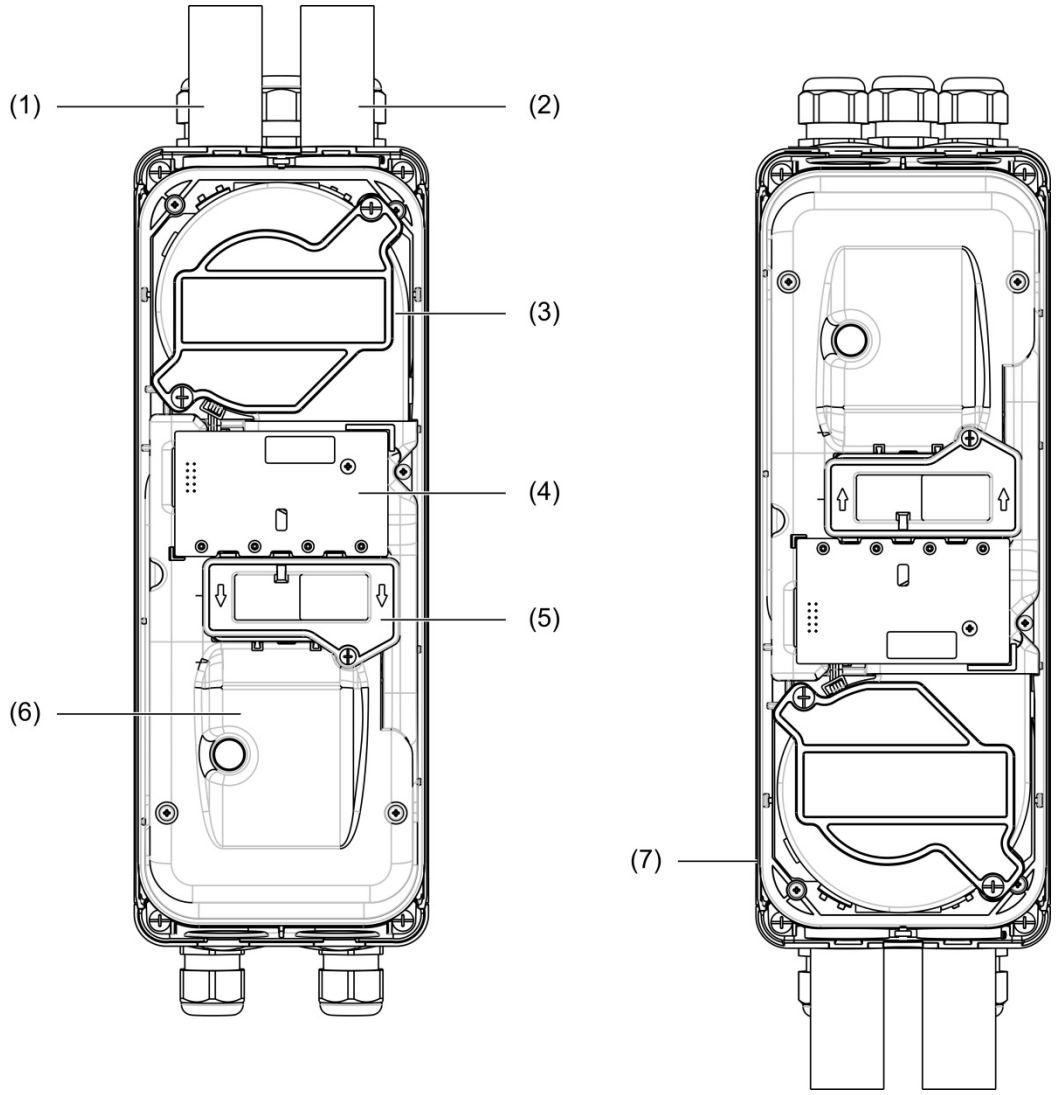

1. Exhaust pipe (outlet)
2. Sampling pipe (inlet)
3. Fan
4. User interface PCBA
5. Filter cover
6. Laser cover
7. Detector module installed at 180 degrees

Note: The detector module may also be installed onto the backplane at 180 degrees to enable pipe entry from below (as shown on the right in Figure 8 above). There is no change to the installation orientation of the backplane.

Backplane installation

Installing the backplane

Install the backplane onto a DIN rail or directly onto the wall using mounting screws. If the backplanes are mounted next to each other, use joining clips to secure them to each other (see Figure 11 on page 19).

To install the backplane onto a DIN rail:

1. Secure the DIN rail to the wall using appropriate fasteners for the mounting surface.
2. Hang the backplane onto the DIN rail using the mounting hooks on the back of the unit (see Figure 9 below).
3. Using a screwdriver, push both of the locking clips up to lock the unit to the rail.

Figure 9: Installing the backplane onto a DIN rail

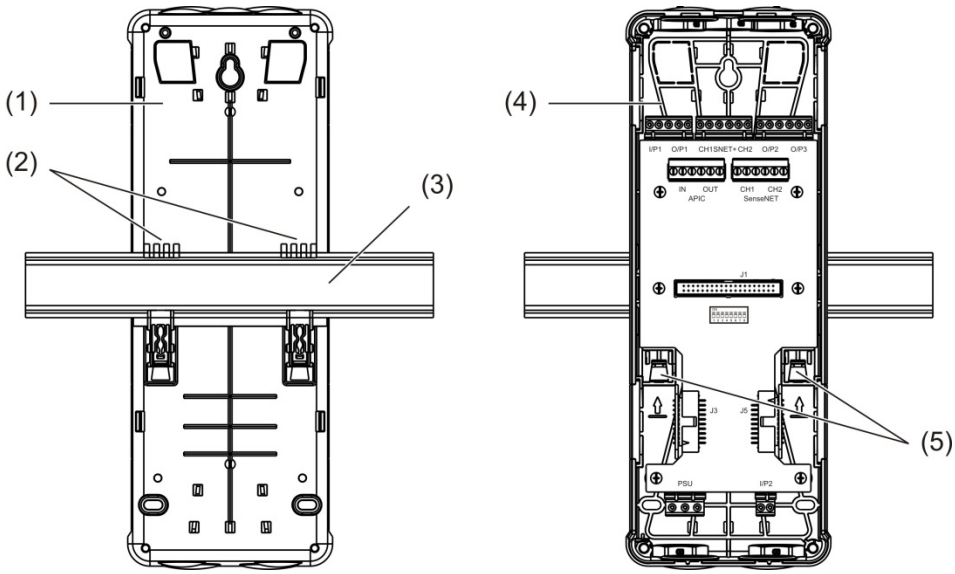

1. Backplane (rear view)
2. Mounting hooks
3. DIN rail
4. Backplane (front view)
5. Locking clips

To install the backplane onto a wall:

1. Hold the backplane to the wall at the required installation height and mark the position of the keyhole screw slot (see Figure 10 below).
2. Remove the backplane from the wall. Drill a hole in the mounting surface where the keyhole position was marked and insert an M4 wall plug.
3. Insert a screw into the keyhole screw slot and hang the backplane onto this screw.
4. Align the backplane (ensuring that it is level) and mark the position of all other fixing holes at the holding screw slots
5. Remove the backplane from the wall, and then drill and plug the remaining fixing holes
6. Replace the backplane, check alignment, and then tighten all fixing screws.

Figure 10: Installing the backplane onto a wall

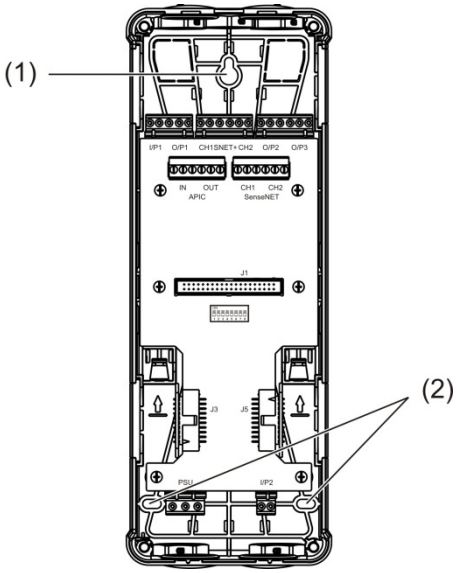

1. Keyhole screw slot
2. Holding screw slots

Figure 11: Using joining clips

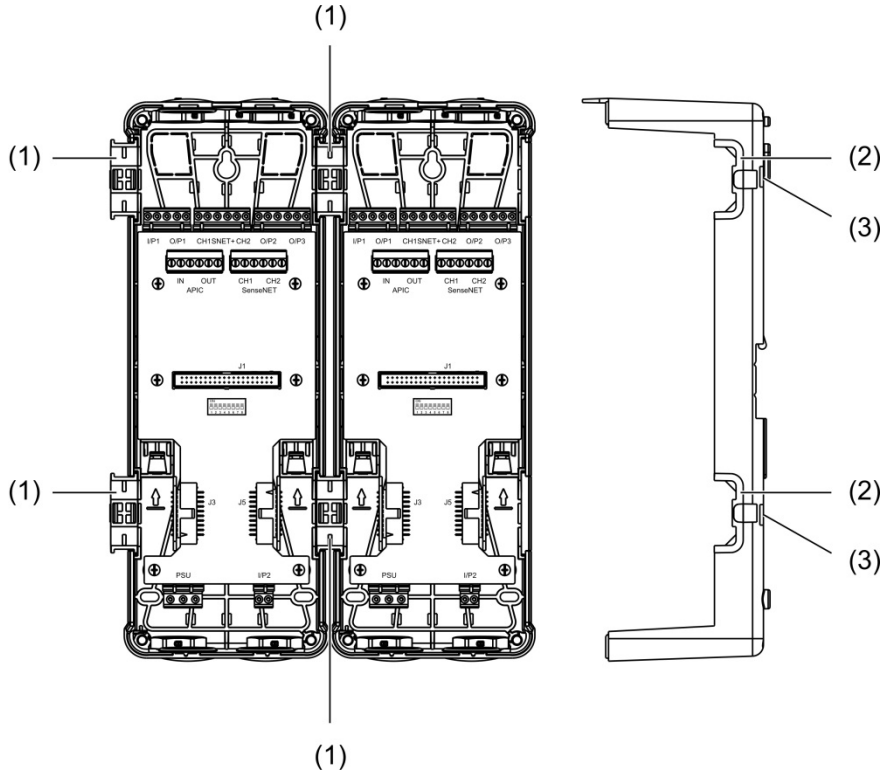

1. Joining clips (front view)
2. Joining clips (side view)
3. Release mechanism for joining clip or protective cover

WARNING: To avoid personal injury, take care when inserting or removing the joining clips or protective covers from the side of the backplane. To remove these items, place the backplane face down on a solid surface and use a screwdriver to push the release mechanism, shown in Figure 11 above (this needs to be done before the backplane is installed onto the wall).

Connections

Recommended cables

Recommended cables for optimal system performance are shown in the table below.

Table 3: Recommended cables

Cable	Cable requirements	Maximum cable length
Power cable	3 × 1.5 mm^2	30 m (98.4 ft.) [1]
System cable	Up to 2.5 mm^2 (13 AWG)	N/A
Data cable	RS-485 data cable up to 2.5 mm^2	1.2 km [0.75 mi.]
Ethernet cable	CAT5, CAT5e, or CAT6	30 m (98.4 ft.) [1]
USB cable	Standard USB cable with A-B connectors	3 m (9.84 ft.) [1]

[1] Observe maximum length to comply with the EMC requirements of EN 54-20.

Other types of cable may be used subject to site-specific electromagnetic interference (EMI) conditions and installation testing.

Securing cables

Use cable glands to ensure clean and secure connections. All cables should be fed through the cable knockouts on the top, bottom, or back of the housing and secured to eliminate movement.

Connecting modules

Connector overview

Figure 12: Backplane PCB connectors (top)

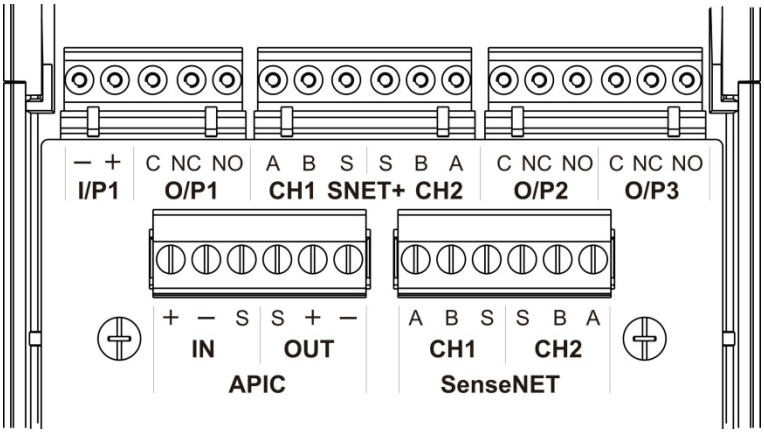

Figure 13: Backplane PCB connectors (bottom)

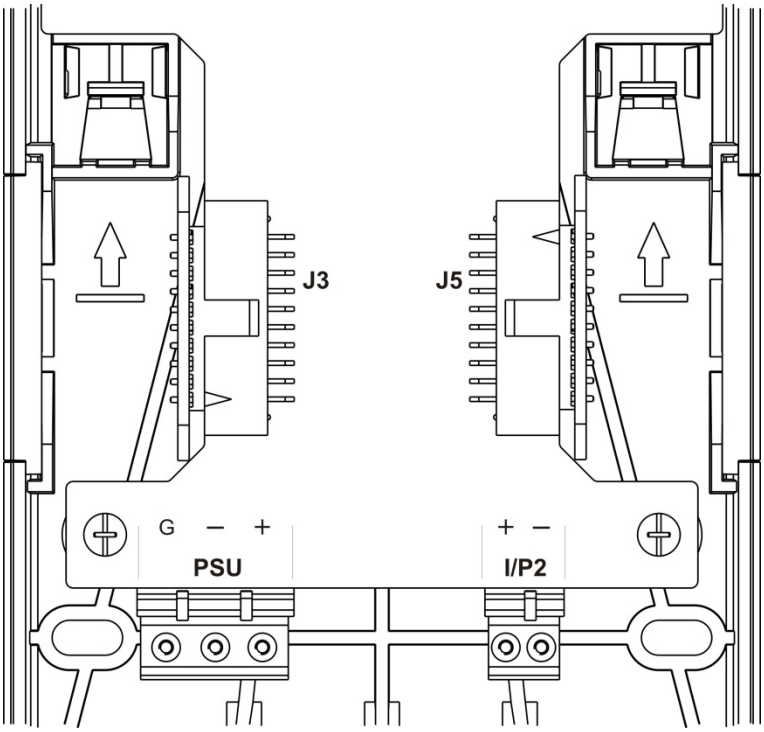

Table 4: Backplane PCB connectors

Connector	PIN	Description
I/P1, I/P2	-	Input (negative)
	+	Input (positive)
O/P1, O/P2, O/P3	C	Output (common)
	NC	Output (normally closed)
	NO	Output (normally open)
SNET+ CH1 [1]	A	SenseNET+ channel 1
	B	SenseNET+ channel 1
	S	SenseNET+ channel 1 (shield)
SNET+ CH2 [2]	A	SenseNET+ channel 2
	B	SenseNET+ channel 2
	S	SenseNET+ channel 2 (shield)
APIC IN [3]	+	APIC in (positive)
	-	APIC in (negative)
	S	APIC in (shield)
APIC OUT [3]	+	APIC out (positive)
	-	APIC out (negative)
	S	APIC out (shield)
SenseNET CH1	A	SenseNET channel 1
	B	SenseNET channel 1
	S	SenseNET channel 1 (shield)
SenseNET CH2	A	SenseNET channel 2
	B	SenseNET channel 2
	S	SenseNET channel 2 (shield)
J3		Ribbon cable connector to connect to modules installed to the left of the module
J5		Ribbon cable connector to connect to modules installed to the right of the module
PSU	G	Power supply (earth)
	-	Power supply (negative)
	+	Power supply (positive)

[1] If used, end-of-line termination is required for the unused J3 connector.
[2] If used, end-of-line termination is required for the unused J5 connector.
[3] Used for connecting an addressable loop.

Connecting modules in a cluster

Communication between modules within a cluster is accomplished using SenseNET+.

A cluster consists of a minimum or standard display module and up to eight detectors. The display module can be installed anywhere within the cluster.

Caution: A command display module cannot replace or substitute a minimum or standard display module in a cluster configuration.

There are three types of cluster, as shown in the table below. Connections depend on the type of cluster used.

Cluster type	Description
Non-distributed	This cluster type consists of a minimum or standard display module and up to four detector modules installed in the same location (next to each other).
Distributed	This cluster type consists of a minimum or standard display module and up to eight detector modules, with each module installed in a different location (not next to each other).
Hybrid	This cluster type consists of a minimum or standard display module and up to eight detector modules. Some of the modules are installed in the same location (non-distributed), others are distributed.

Connecting a non-distributed cluster

Connect a non-distributed cluster (a minimum or standard display module and up to four detector modules) using the supplied ribbon cable and the J3 and J5 connectors on the backplane PCB, as shown below.

In this installation type, the ribbon cable also distributes the power supply within the cluster (see “Connecting the power supply” on page 26).

Figure 14: Non-distributed cluster

1. Ribbon cable

Note: End-of-line termination is not required for unused J3 and J5 connectors in this cluster type.

Connecting a distributed cluster

Connect a distributed cluster (a minimum or standard display module and up to eight detector modules), using the SNET+ connectors on the backplane PCB, as shown below. The maximum cable length between modules is 1,200 m (4,000 ft.).

In this installation type, each module requires a power supply (see “Connecting the power supply” on page 26) and an end-of-line termination to be installed onto the unused J3 and J5 connectors on the backplane PCB.

Figure 15: Distributed cluster

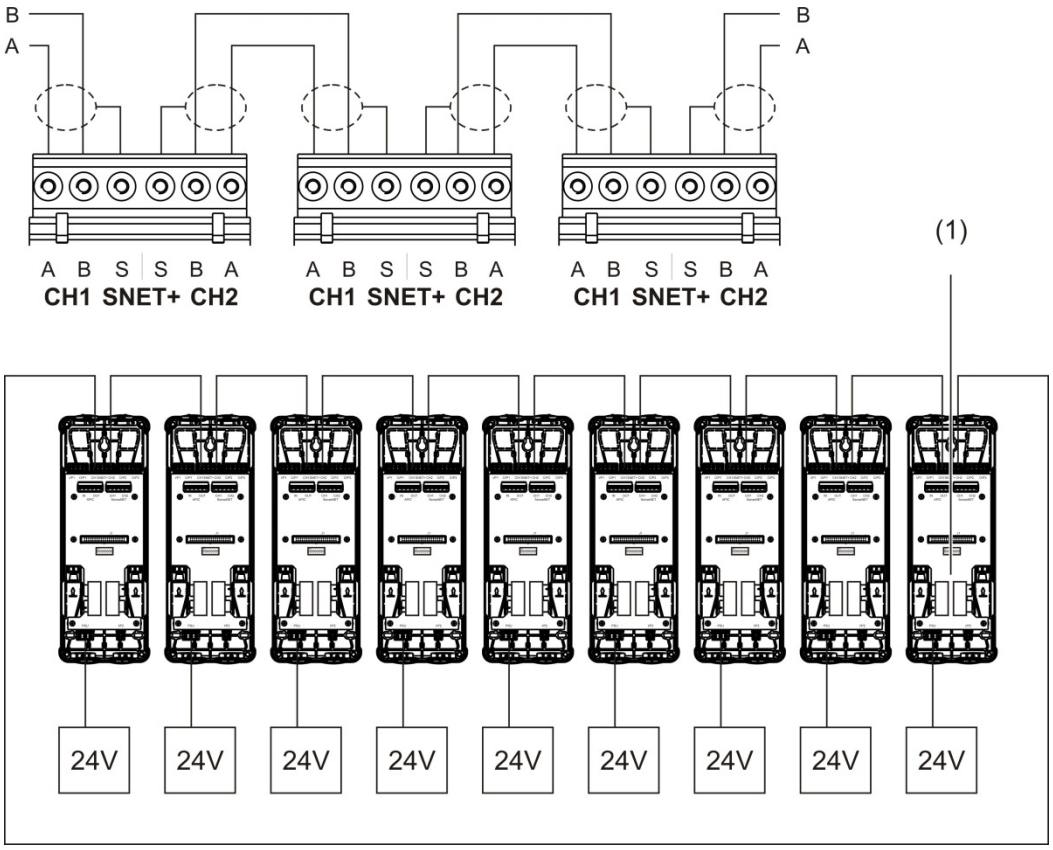

1. End-of-line termination (required for all unused J3 and J5 connectors in this cluster type)

Connecting a hybrid cluster

Connect a hybrid cluster (a minimum or standard display module and up to eight detector modules) using ribbon cables for adjacent modules and the SNET+ connectors for distributed modules within the cluster, as shown below. The maximum cable length between modules is 1,200 m (4,000 ft.).

In this installation type, each group of adjacent modules uses a shared power supply (connected to a single module) and each of the distributed modules requires a separate power supply. End-of-line termination is required for all unused J3 and J5 connectors on the backplane PCB.

Figure 16: Hybrid cluster

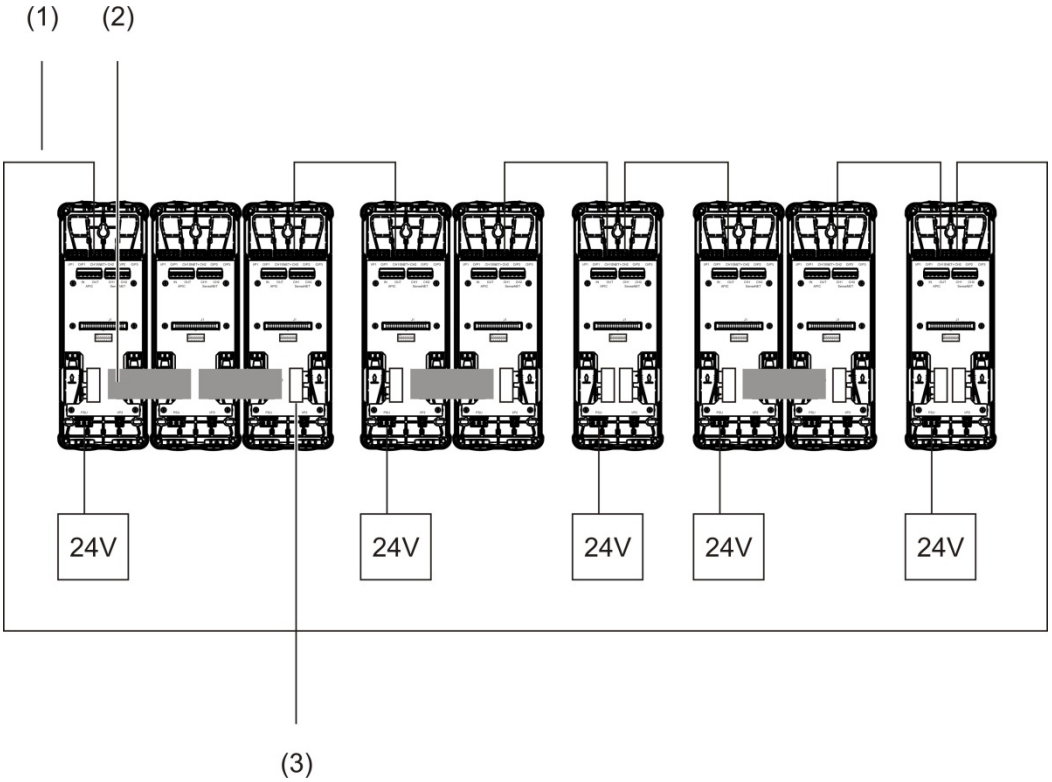

1. SenseNET+ connections
2. Ribbon cables
3. End-of-line termination (required for all unused J3 and J5 connectors in this cluster type)

Connecting inputs

Connect input devices to the I/P1 and I/P2 connectors.

Inputs are supervised to detect open, activated, and not activated states. Inputs require a 15 kΩ end-of-line resistor (provided in the accessory kit).

General input activation characteristics are shown in the table below. For power supply fault supervision activation characteristics, see “Connecting the power supply fault supervision” on page 27.

Table 5: General input activation characteristics

State	Activation value (detector)	Activation value (display)
Not activated (nominal)	15 kΩ ±10%	15 kΩ ±10%
Short circuit (activated)	< 2.7 kΩ	< 3.3 kΩ
Open circuit (supervision fault)	> 34.1 kΩ	> 470 kΩ

See “Configuring the inputs” on page 62 for input configuration options.

Connecting outputs

Connect output devices to the O/P1, O/P2, and O/P3 connectors.

Outputs are activated by a voltage free relay contact with normally open (NO), normally closed (NC), and common (C) connections.

See “Configuring the outputs” on page 64 for output configuration options.

Connecting the power supply

Caution: Ensure that the installed power supply covers the power consumption requirements for your installation. In installations with high power consumption requirements, additional power supplies may be required.

Connect the power supply to the PSU connector.

The module can be powered by any EN 54-4 or UL/cUL and FM compliant monitored 24 VDC power supply of sufficient capacity for the installation requirements.

Note: For compliance with EN 54-20, the module must be powered by a power supply approved to EN 54-4.

See “Connecting a non-distributed cluster” on page 23, “Connecting a distributed cluster” on page 24, and “Connecting a hybrid cluster” on page 25 for more information on power supply requirements for each type of cluster.

Connecting the power supply fault supervision

Install a 15 kΩ end-of-line resistor onto the power supply fault output and connect the output to I/P1 or I/P2. PSU supervision input activation characteristics are shown in the table below.

Note: The input must be configured for the required fault supervision (mains or battery) – see “Configuring the inputs” on page 62 for more information.

Table 6: PSU supervision input activation characteristics

State	Activation value (detector)	Activation value (display)
Not activated (PSU fault)	15 kΩ ±10%	15 kΩ ±10%
Short circuit (normal)	< 2.7 kΩ	< 3.3 kΩ
Open circuit (supervision fault)	> 34.1 kΩ	> 470 kΩ

Connecting a multiple cluster network

Connect a multiple cluster network to the SenseNET connector.

Multiple cluster networks are connected as shown in Figure 17 on page 28 (display to display).

A multiple cluster network must include one stand-alone command display module and each networked cluster requires its own minimum or standard display module.

A secondary stand-alone command display module can be added for redundancy – see “Using a secondary command module” on page 77.

Note: The SenseNET network is a communications loop based on the RS-485 master-slave protocol. This allows you to manage and monitor up to 127 modules (displays and detectors).

Figure 17: Connecting a multiple cluster network

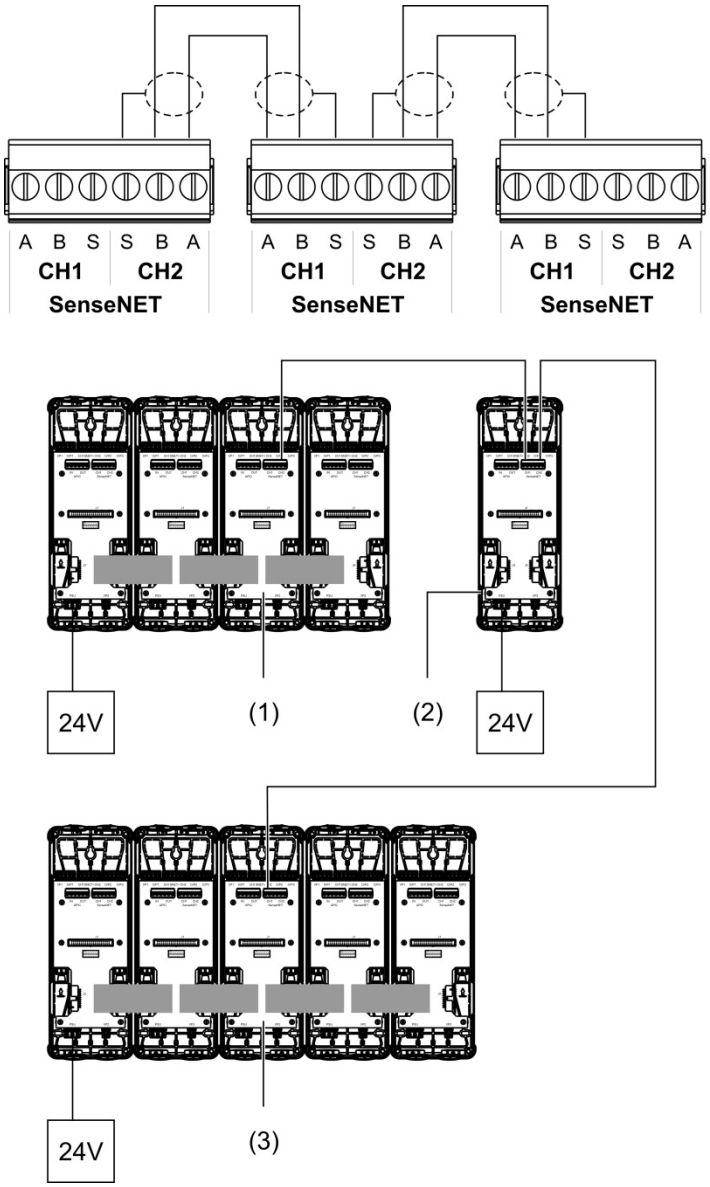

1. Minimum display module (first cluster)
2. Command display module (stand-alone)
3. Standard display module (second cluster)

Note: The network configuration may also be closed to provide for redundancy within the network.

Connecting to a fire alarm control panel

Note: Because of the many available options for connecting to a fire alarm control panel, the following covers only the most common methods that are likely to be used.

The detector provides the following options for interfacing with fire alarm control panels:

- **Inputs and outputs:** This option allows (for example) connecting an output on the module to an input on the fire panel to send event notifications to the fire panel. The module output and control panel input require appropriate configuration.
- **Addressable Protocol Interface Cards (APICs):** This option requires the installation of an optional APIC board (not supplied). With the APIC board installed and the addressable loop connected to the APIC connector on the backplane PCB (display modules only), the detection system becomes an additional device on the addressable loop.

See Appendix A “APIC installation” on page 105 for more information on installing an APIC board.

Addressing modules

Set the unique 7-bit module address using the address DIP switch on the backplane PCB Figure 6 on page 14). The address range is 1 to 127 for all modules (including command modules) and is set using the first seven bits of the DIP switch (bit 8 is not used).

The full range of addresses and their settings is shown in Figure 18 below.

Figure 18: Address settings

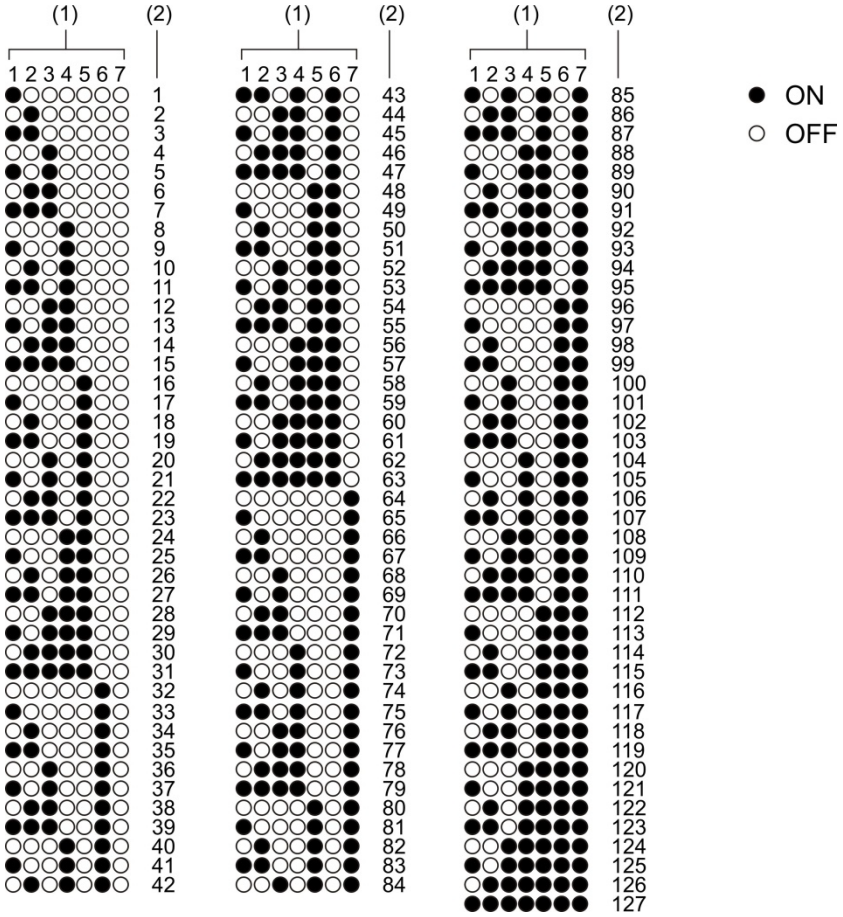

1. DIP switch setting
2. Address

Installing the display and detector modules

Install the display or detector module (without the cover) onto the backplane using the four screws provided (see Figure 19 below). Each module includes four captive screws (attached to each corner of the unit).

Note: The detector module may also be installed onto the backplane at 180 degrees, if required, as shown in Figure 8 on page 16. This allows the sampling and exhaust pipes to enter from the bottom of the unit instead of the top There is no change to the installation orientation of the backplane.

Figure 19: Installing the display and detector modules

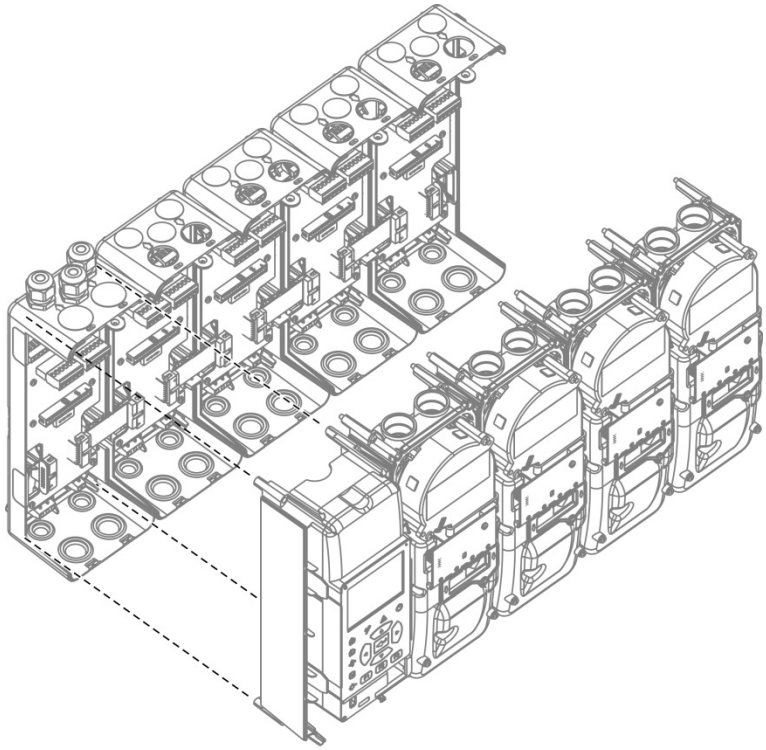

Connecting pipes

Caution: To comply with EN 54-20 requirements, ensure that the pipe network has been designed and its performance verified using PipeCAD pipe modelling software before installing pipes. See your PipeCAD documentation for more information.

To assist pipe installation, the following pipe adaptors are available:

- Offset pipe adaptor (supplied)
- Straight pipe adaptor (not supplied)

The adaptors are designed to facilitate the removal of the detector module from the backplane without fully removing the pipes.

Note: Do not use glue on the pipe adaptors.

The detector also supports pipe entry without the use of the pipe adaptors (for both 25 and 27 mm pipes), but this option does not allow for the easy removal of the detector module described above.

Figure 20: Connecting pipes using a pipe adaptor

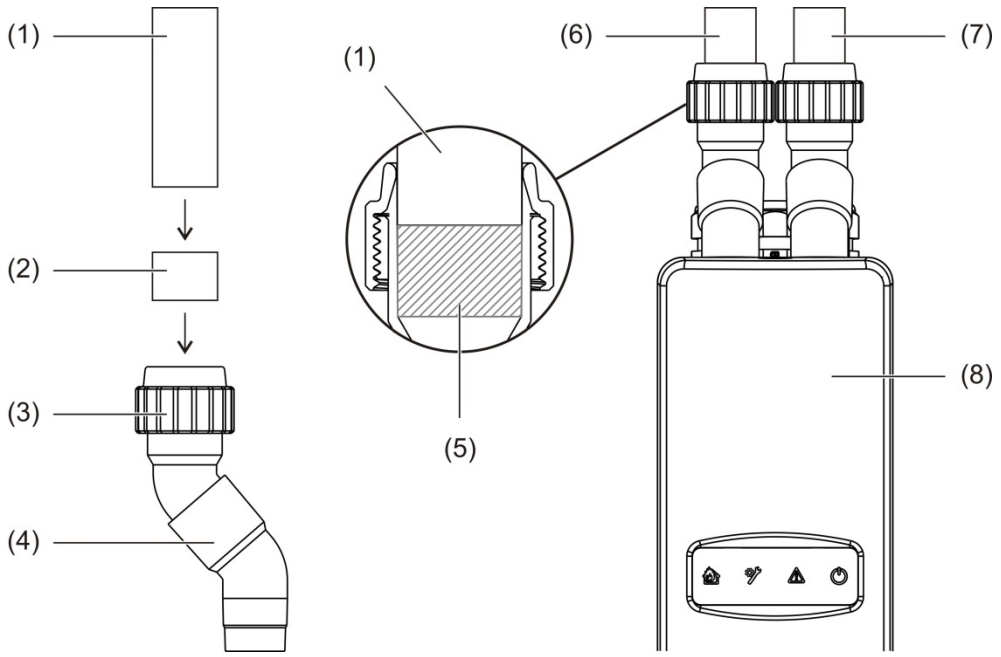

1. Pipe
2. Rubber seal
3. Nut
4. Offset adaptor
5. Internal view of 20 to 25 mm gap
6. Exhaust pipe
7. Sampling pipe (inlet)
8. Detector

To connect pipes when using a pipe adaptor

1. Loosen the adaptor nut and slide the pipe into the adaptor, ensuring that the pipe is firmly enclosed by the rubber seal.

   Leave a gap of approximately 20 to 25 mm (0.8 to 0.98 in.) between the end of the pipe and the end of the adaptor inlet so that the adaptor can be moved up the pipe later, if required.
2. Tighten the adaptor nut loosely (enough that the pipe does not move).
3. Push the adaptor through the backplane and into the detector module (the exhaust pipe on the left, the sampling pipe on the right).
4. Tighten the adaptor nut firmly.

To remove the detector module when using a pipe adaptor

1. Loosen the adaptor nut and slide the adaptor upwards, until it clears the detector module and onto the pipe (using the 20 to 25 mm gap left during installation).
2. Remove the detector module.

Connecting to a PC

If using the Remote software application, you can connect your PC to the display module by direct cable connection (USB, Ethernet) or remotely (TCP/IP). For connector locations, see Figure 7 on page 15.

Both direct cable connection (Ethernet) and remote connection (TCP/IP) require Internet Protocol (IP) configuration on your PC (see “Configuring IP settings for your PC” on page 35) and on the display module (see “Configuring TCP/IP” on page 78).

Connecting your PC to a display module

To connect using a USB cable:

1. Using a USB cable, connect your PC to the USB type B connector on the display module.
2. Open Remote, and then click on Communication Settings.
3. Select USB, and then select the COM Port.
4. Click Connect.

This option may only be used for temporary connections.

To connect using an Ethernet cable:

1. Configure the IP settings for your PC (see “Configuring IP settings for your PC” on page 35).
2. Using an Ethernet cable, connect your PC to the Ethernet connector on the display module.
3. Open Remote, and then click on Communication Settings.
4. Select Ethernet, and then click Connect.

   The default IP Address for the display module is 192.168.104.140. The default TCP Port is 2505. Update these values if you have changed the default settings.

To connect using TCP/IP:

1. Configure the IP settings for your PC (see “Configuring IP settings for your PC” on page 35).
2. Open Remote, and then click on Communication Settings.
3. Select Ethernet, and then click Connect.

   The default IP Address for the display module is 192.168.104.140. The default TCP Port is 2505. Update these values if you have changed the default settings.

Notes:

- If your network is protected by a firewall, the port configuration in your firewall may need to be updated to allow communication with Remote.
- If you change the IP address of the display module, you must change the IP configuration in Remote.
- Only IPv4 connections are supported.

Configuring IP settings for your PC

Configure the IP settings for your PC as shown below.

To configure the IP settings for your PC:

1. Open the Network Connections settings for your PC.

   For Windows this is typically Start Menu > Control Panel > Network & Internet.
2. In Advanced network settings, click Change adaptor options.
3. Depending on your connection method, double-click Ethernet or double-click Wi-Fi.
4. Select Internet Protocol Version 4 (TCP/IPv4).
5. Click Properties, and then click Use the following IP address.
6. Enter the IP settings shown in Table 7 below.
7. Click OK, and then click OK again to save your changes.

Table 7: IP settings for your PC

Parameter	Default value	Notes
IP address	192.168.104.xxx	Where xxx can be any value from 2 to 255, except the address assigned to the display module.
Subnet mask	255.255.255.0	If you change the subnet mask and the display module IP address, the IP settings for your PC must be updated accordingly.
Default gateway	192.168.104.1	Optional setting for connections using a gateway. Always confirm gateway settings with your network administrator.

Chapter 3
Configuration and Commissioning

Summary

This chapter provides configuration and commissioning information for your detector.

Content

Introduction 38
- Access levels 38
- Access codes 39
- Configuration overview 40
- Wizards 43

Access level 1 user operation 45

Access level 2 user operation and configuration 45
- Detector status 46
- The Main menu 49
- The General Settings menu 49
- The Device Settings menu 51
- The Detection Settings menu 51
- The Communications menu 52
- The Log menu 52
- The Test menu 54
- The Reset menu 57
- The Enable/Disable menu 57

Access level 3 user operation and configuration 59
- The Main menu 59
- General Settings menu 60
- The Device Settings menu 61
- The Detection Settings menu 68
- The Communications menu 76
- The Log menu 81

Access level 4 user operation and configuration 82
- The Main menu 82
- The General Settings menu 83
- The Device Settings menu 84

Commissioning 86
- Overview 86
- Installation inspection 86
- Configuration check 87
- Commissioning tests 87
- Connectivity check 91

Introduction

Access levels

Access to some of the features of this product is restricted by the access level assigned to a user account.

Caution: To prevent unauthorized access, always change the default access codes (see “Access codes” on page 39 for details on how to do this). If a default access code is not changed, a warning is displayed until the access code is updated.

Level 1

This is the default access level.

This level allows basic operational tasks, such as viewing the active alarms, faults and warnings. No access code is required.

Level 2

This level allows additional operational tasks and basic maintenance tasks and is reserved for authorized users who have been trained to operate the detection system and perform basic maintenance tasks. The default access code for this level is 2222.

Level 3

This level allows system configuration tasks and is reserved for authorized users who have been trained to operate and configure the detection system. The default access code for this level is 3333.

Level 4

This level allows full system configuration and is reserved for authorized users installing and upgrading the detection system. The default access code for this level is 4444.

Access codes

To enter a restricted access level:

1. Press F2 (Menu).

   The access level and access code prompt appears on the display.
2. Select the access level that you want using the up and down arrows on the keypad, and then press Enter.
3. Enter your four-digit access code, and then press Enter.

   Use the up and down arrows to select the number, and then press the right arrow to confirm the entry and move to the next number.

When a valid four-digit access code has been entered, the display shows the Main menu for the selected access level.

Caution: If an invalid access code is entered twice in a row, access is blocked for 30 seconds. Access remains blocked until a correct access code is entered.

To exit a restricted access level:

1. Press F2 (Logout) from the Main menu.

An automatic timeout period can also be configured to exit a restricted access level if no keys are pressed. See “Changing screen properties” on page 50.

To change an access code:

1. Login to your access level, and then select General Settings from the Main menu.
2. Select Access Codes, and then select the access code level that you want to change.

   Level 2 users can only change level 2 access codes. Level 3 users can change access codes for levels 2 and 3. Level 4 users can change access codes for levels 2, 3, and 4.
3. Enter the new access code twice.
4. Press F1 (Save) to save your changes and exit to the previous screen.
5. If you have no other configuration changes to make, then press F1 (Apply) from the Main menu or the submenu to apply the changes to the system.

Configuration overview

Note: Configuration options provided in this manual are for the ModuLaser system only and may differ from legacy ASD units.

Configuration methods

The detection system can be configured using the display module controls or via a PC. For best results we recommend that the detection system is configured using the Remote software application.

Scope of configuration

If configured using a display module, the scope of configuration is defined by the module used, as shown in the table below.

Module	Scope
Command display module	Configures any device connected to a SenseNET network.
Standard display module	Configures any device in the associated cluster.

Display module controls

Use the buttons on the front of the display module to navigate menus, to select menu options, and to enter passwords and system information.

Figure 21: Display module controls

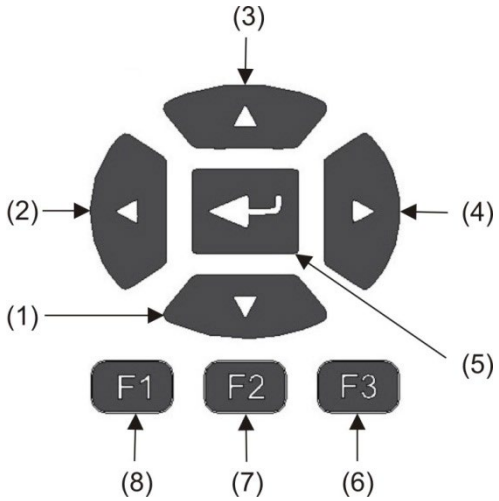

Table 8: Display module controls

Item	Button	Description
1	Down	Press to scroll down a menu or to decrease the value of a parameter
2	Left	Press to scroll left or to navigate to the previous field or digit
3	Up	Press to scroll up a menu or to increase the value of a parameter
4	Right	Press to scroll right or to navigate to the next field or digit
5	Enter	Press to confirm a selection or value
6	F3	Soft key – functionality changes depending on menu (Menu, Logout, Exit, etc.)
7	F2	Soft key – functionality changes depending on menu (Menu, Logout, Exit, etc.)
8	F1	Soft key – functionality changes depending on menu (Menu, Logout, Exit, etc.)

Configuration options

The options listed below are available when making configuration changes.

Table 9: Configuration controls

Option	Button	Description
Save	F1	Saves the current configuration change without applying it immediately. Note: When making configuration changes to legacy devices, the changes are saved by pressing F1 (Apply).
Apply	F1	Applies the current configuration change and all stored (saved) configuration changes. The detector resets automatically.
Cancel	F2	Discards the current configuration change and returns to the previous screen.
Exit	F3	Exits the configuration process without storing or applying the current configuration change. The configuration process can be resumed.

Notes

- Configuration changes are only applied to the system by pressing F1 (Apply).
- When updating multiple configuration settings, we recommend that you save after each change, and then apply all changes from the Main menu.
- Only values within the allowed range for each parameter will be accepted.
- Any changes not applied are lost when the system exits a restricted user level.

Wizards

Wizards are provided to assist maintenance and configuration tasks. Access restrictions for each are shown below.

Wizard	Access level
Maintenance wizard	Access level 2 and higher
Configuration wizard	Access level 3 and higher

The maintenance wizard

To use the maintenance wizard:

1. Press F1 (Wizard) from the Main menu.
2. Select Maintenance Wizard.
3. Press F3 (Next) to step through the menus included in the wizard (see Table 10 below).

   Press Enter to access a menu. From a menu, press F2 (Back) to return to the wizard.
4. When you have completed the required maintenance tasks, press F2 (Exit) to exit the wizard.

Table 10: The maintenance wizard

Menu	Description
Enable/Disable	Disable devices before starting maintenance. See “Disabling a device” on page 57 for more information.
Filter Status	Display the filter status for detectors. We recommend that the filter is changed when the Filter value reaches 20% (this indicates an 80% filter blockage). See “Detector status” on page 46 for more information.
Input Test	Test inputs. See “Performing an input test” on page 55 for more information.
Output Test	Test outputs. See “Performing an output test” on page 55 for more information.
Enable/Disable	Enable devices previously disabled for maintenance.

The configuration wizard

To use the configuration wizard:

1. Press F1 (Wizard) from the Main menu.
2. Select Configuration Wizard.
3. Press F3 (Next) to step through the menus included in the wizard (see Table 11 below).

   Press Enter to access a menu. From a menu, press F2 (Back) to return to the wizard.
4. Press F3 (Apply) to apply configuration changes, and then press F2 (Exit) to exit the wizard.

Table 11: The configuration wizard

Menu	Description
Network Setup	Scan the network to find devices. See “Configuring the network” on page 76 for more information.
Date and Time	Configure date and time settings See “Changing the date and time” on page 60 for more information.
Alarm Levels	Configure alarm level settings for detectors See “Configuring the alarm levels” on page 68 for more information.
Flow Setup	Configure flow limit values, fan speed, and power save settings for detectors See “Configuring flow parameters” on page 72 for more information.
Inputs	Configure input settings See “Configuring the inputs” on page 62 for more information.
Outputs	Configure output settings See “Configuring the outputs” on page 64 for more information.
Calibration	Start the FastLearn and pipe calibration procedures when configuration is complete. See “Configuring ClassiFire operation” on page 70 and “Configuring flow parameters” on page 72 for more information.
Apply	Apply configuration changes.

Access level 1 user operation

Level 1 user operations are those that can be performed by any user. No access code is required to perform tasks at this level.

This access level lets you view active system events such as alarms, faults, and warnings on the display module screen.

Use the up and down buttons to scroll through a list of events. Click on an event notification for more information about the event.

Note: Standard display modules display events for the cluster. Command display modules display events for the SenseNET network.

Access level 2 user operation and configuration

This access level is restricted and is reserved for authorized users who have been trained to operate the detection system and to perform basic maintenance tasks. The default access code for this level is 2222.

This access level lets you:

- View detector status information
- Configure localization options (display language, measurement units, time and date format, etc.)
- Configure screen properties (brightness, backlight mode, timeout, power save, etc.)
- View or save event logs and chart records
- Perform tests (installation, inputs, outputs, user interface, etc.)
- Reset the system
- Enable and disable devices and configurable options

Detector status

Use the detector status screens to view current detector status information, alarm and prealarm values, filter status, flow levels, and fan speed.

Figure 22: Detector status screens

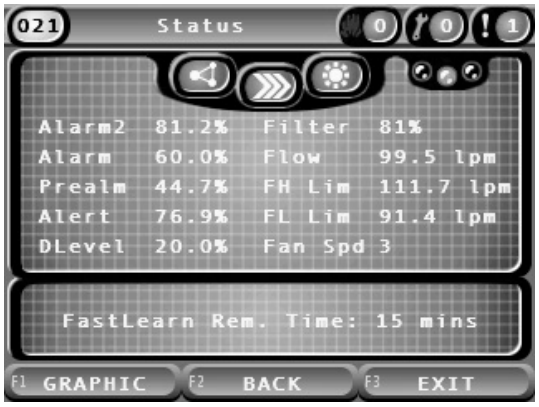

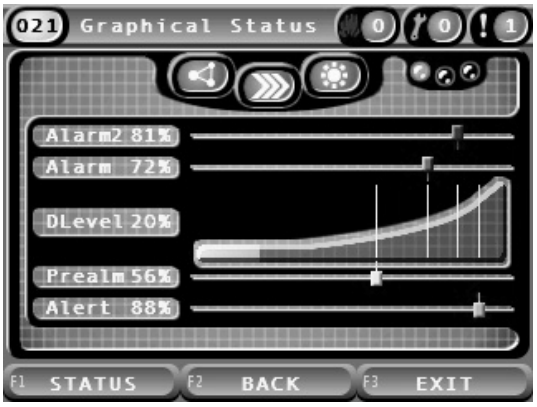

To view the current status of a detector:

1. From the Main menu, press F3 (Exit) to access the home screen.
2. Press F1 (Status), and then select the detector that you wish to view the status of.

   The default status information screen opens.
3. Press F1 (Graphic) for a graphical view of the detector status information.
4. Press F1 (Status) to return to the default status screen.
5. Press F3 (Exit) to exit the status screen.

Status screen icons, values, and messages

The status screen uses the icons, values, and banner messages shown in the following tables to indicate the detector status.

Note: The status information may differ for legacy devices in a network.

Table 12: Status screen icons

Icon		Description
	Detector online	Indicates that the detector is online.
	Detector offline	Indicates that the detector is offline.
	Detector disabled	Indicates that the detector is disabled.
	Detector in test	Indicates that the detector is in test.
	Detection aborted	Indicates that the detection is aborted.
	FastLearn mode	Indicates that the detector is in FastLearn mode. This mode is used to learn the current smoke level present in the environment.
	Intermediate learn mode	Indicates that the detector is in intermediate learn mode. In this mode, the detector is partially operational while it is fine tuning the environment learning.
	Normal mode	Indicates that the detector mode of operation is normal.
	Flow setup	Indicates that flow setup is in process.
	Pipe calibration	Indicates that pipe calibration is in process.
	Day mode	Indicates that the primary sensitivity mode setting for the detector is day mode.
	Night mode	Indicates that the primary sensitivity mode setting for the detector is night mode.

Table 13: Status screen values

Value	Description
Alarm 2	The Fire Alarm 2 smoke threshold (percentage)
Alarm	The Fire Alarm smoke threshold (percentage)
Prealm	The Prealarm smoke alarm threshold (percentage)
Alert	The Alert/Aux. Alarm smoke threshold (percentage)
Dlevel [1]	The detector output level (percentage)
Filter	The filter cleanliness level (percentage)
Flow	The flow measured for the detector (lpm or cfm)
FH Lim	The flow high limit (lpm or cfm)
FL Lim	The flow low limit (lpm or cfm)
Fan Spd	The fan speed (1 to 16)

[1] The detector output level is a relatively scaled value from 0 to 100% that indicates the obscuration measurement in the sampled air in real time. As smoke is introduced, the detector level will begin to increase. When the detector level crosses any of the alarm thresholds, the detector will generate an alarm.

Table 14: Status screen banner messages

Banner message	Displays	Priority [1]
Detection Aborted	Displays when detection is aborted	1
Alarm 2 [2]	Displays during a Fire Alarm 2 state	2
Alarm [2]	Displays during a Fire Alarm state	3
Prealarm [2]	Displays during a Prealarm state	4
Alert [2]	Displays during an Alert/Aux. Alarm state	5
Pipe calibration in progress	Displays during pipe calibration	6
Retrieving flow data, please wait….	Displays during flow setup	7
FastLearn Rem. Time: X mins	Displays during FastLearn	8
Intermediate Learn	Displays during intermediate learning	9
Normal Mode	Displays when in normal mode	10

[1] When multiple events are active, the messages with the higher priority are displayed.
[2] Alarm states display as flashing red text.

The Main menu

The Main menu for this access level is shown below.

Figure 23: Access level 2 Main menu

The General Settings menu

Use the General Settings menu to localize the display and to change screen display properties.

Localizing the display

Use the Localize menu to localize the display, such as the language and measurement unit used. Configurable options are shown in the table below.

Table 15: Localization options

Option	Description
Language	Configures the language of the display, and log files.
Units	Configures the measurement unit system (metric or imperial).
Date Format	Configures the date format (DD/MM/YY or MM/DD/YY).
Time Format	Configures the time format (12-hour or 24-hour).
Daylight Saving	Configures automatic daylight saving (Europe, US, Australia, or Manual).

To localize the display:

1. Select General Settings from the Main menu, and then select Localization.
2. Select the option that you want to configure, and then enter your changes.
3. Press F1 (Save) to save your changes and exit to the previous screen.
4. If you have no other configuration changes to make, then press F1 (Apply) from the Main menu or the submenu to apply the changes to the system.

Changing screen properties

Use the Screen Properties menu to configure screen properties, such as brightness and backlight mode. Configurable options are shown in the table below.

Table 16: Screen property options

Option	Description
Brightness	Configures the brightness of the display.
Backlight Mode [1]	Configures the display backlight mode (Auto, Always On). Select Always On if the display should be permanently lit (even after an automatic logout).
F3 Soft Key	Configures the functionality of the F3 soft key for the home screen. The available options are: Unused (no F3 soft key functionality), Reset (resets all devices in the system), Disable (open the Disable menu), and Test (opens the Test menu).
Inactiv. Tout. [1]	Configures the automatic timeout period (in minutes) to exit a restricted access level if no keys are pressed. The display backlight is turned off when the timeout period elapses and the system logs out. Any configuration changes that have not been applied are lost after the timeout period.
Power Save	Configures the power save feature. If Power Save is checked, the display enters low power mode and turns off after 90 seconds of inactivity when a mains fault is detected.

[1] For access levels 1 and 2, backlight brightness is reduced after half of the configured timeout value.

To configure screen properties:

1. Select General Settings from the Main menu, and then select Screen Properties.
2. Select the option that you want to configure, and then enter your changes.
3. Press F1 (Save) to save your changes and exit to the previous screen.
4. If you have no other configuration changes to make, then press F1 (Apply) from the Main menu or the submenu to apply the changes to the system.

The Device Settings menu

Use the Device Settings menu to view device information.

Viewing device details

Use the Device Details menu to view details of the devices in the network or cluster.

Note: Command display modules display devices for the entire SenseNET network. Standard display modules only display devices in the associated cluster.

To view device details:

1. Select Device Settings from the Main menu, and then select Device Details.

   A list of devices is displayed.
2. Select the device that you want to view or press F1 (Go To) to search for a device by the device address.

   The device type details are displayed.
3. Press F2 (Cancel) twice to return to the Device Settings menu.

The Detection Settings menu

Use the Detection Settings menu to compare a previously saved detector status baseline with the current detector status. See “Configuring a detector status baseline” on page 75 for more information.

Note: Command display modules display devices for the entire SenseNET network. Standard display modules only display devices in the associated cluster.

To view the baseline comparison:

1. Select Device Settings from the Main menu, and then select Detection Settings.
2. Select Baseline, and then select View Baseline.

   A list of detectors is displayed.
3. Select the detector that you want to view or press F1 (Go To) to search for a detector by the device address.

   The saved baseline and current status details for the detector are displayed side by side. Press F1 or use the left and right arrow keys to toggle between fire and flow status comparisons.
4. Press F3 (Exit) to return to the Main menu.

The Communications menu

Use the Communications menu to safely remove a USB flash drive.

To remove a USB device:

1. Select Communications from the Main menu, and then select Unmount USB Device.

   Remove the USB flash drive when prompted.

The Log menu

Use the Log menu to view and save an event log or a chart record.

- An event log stores a detailed list of all device events. Event logs are available for displays and detectors.
- A chart record is a series of sample detection records. Chart records are only available for detectors.

To save event logs and chart records, a USB flash drive must be inserted into the USB connector in the display module.

Note: If your flash drive is not recognized by the module, reformat it as FAT32 from a PC and try again. If the problem persists, try a different flash drive.

Viewing and saving event logs

To view an event log:

1. Select Log from the Main menu, and then select View Event Log.
2. Select the device that you want to view or press F1 (Go To) to search for a device by the device address.

   The device event log is displayed. Use the up and down arrows to scroll through the events in the list.
3. Press F3 (Exit) to return to the Main menu.

To save an event log:

1. Remove the display cover, insert a USB flash drive into the USB connector, and replace the cover.
2. Select Log from the Main menu, and then select Save Event Log.
3. Select the device that you want to view or press F1 (Go To) to search for a device by the device address.
4. Enter the Day Start and the Period.

   The Day Start value is the start day and time for the *most recent* event of interest that you want to include. The Period is the range of time *up to the start day and time* that you want to include (an hour, a day, a week, a month, all).

5. Press F1 (Save).

   The event log is saved as a comma separated (CSV) file to the following folder on the USB flash drive:

   _ASPIRATION\Log\

   This folder is created automatically on the flash drive. The name of the saved file takes the format:

   AAA_YYYYMMDD_HHMM_TT.csv

   Where AAA is the device address, YYYYMMDD is the current date, HHMM is the current time, and TT is a the device type identification code.

6. Press F3 (Exit) to return to the Main menu.

Viewing and saving chart records

Note: We recommend that requests to view or save chart records be targeted to narrow date and time periods.

To view a chart record:

1. Select Log from the Main menu, and then select View Chart Record.
2. Select the detector that you want to view or press F1 (Go To) to search for a detector by the device address.
3. Check the sample types that you want included in the chart record, and then set the Day Start Hour and Period values, if required.

   Sample types that can be included in the chart record are: Fire Alarm and Fire Alarm 2, Alert/Aux. Alarm, Prealarm, Detector Level, Flow, and Temperature.

4. Press F1 (Graphic) to view the chart record.

   The chart record is displayed for the selected sample types and period.

5. Press F3 (Exit) to return to the Main menu.

To save a chart record:

1. Remove the display cover, insert a USB flash drive into the USB connector, and replace the cover.
2. Select Log from the Main menu, and then select Save Chart Record.
3. Select the detector that you want to view or press F1 (Go To) to search for a detector by the device address.
4. Check the sample types that you want included in the chart record, and then set the Day Start Hour and Period values, if required.

   Sample types that can be included in the chart record are: Fire Alarm and Fire Alarm 2, Alert/Aux. Alarm, Prealarm, Detector Level, Flow, and Temperature.

5. Press F1 (Save).

   The chart record is saved as a comma separated (CSV) file to the following folder on the USB flash drive:

   _ASPIRATION\Chart\

   This folder is created automatically on the flash drive. The name of the saved file takes the format:

   AAA_YYYYMMDD_HHMM_TT.csv

   Where AAA is the device address, YYYYMMDD is the current date, HHMM is the current time, and TT is a the device type identification code.

6. Press F3 (Exit) to return to the Main menu.

The Test menu

Use the Test menu to perform tests. Available tests are shown in the table below.

Note: The system automatically exits a test after 100 minutes if the test is not ended manually.

Table 17: The Test menu

Option	Description
Installation test	Tests fire detection and notification
Output test	Tests outputs
Input test	Tests inputs
User interface test	Tests the user interface (LEDs, buttons, etc.)
Diagnostics [1]	Tests various diagnostics

[1] Selected legacy devices only.

Note: If a module is in an alarm condition, active tests cannot be exited manually until the alarm status is cleared.

Performing an installation test

The installation test is used to test fire detection and notification.

When this test mode is active:

- General fault outputs are activated
- Fire outputs are not activated

To perform an installation test:

1. Select Test from the Main menu, and then select Installation Test.
2. Select the device that you want to test.

   The warning indicator flashes slowly to indicate test mode.
3. To end the installation test, press Enter again.
4. Press F2 (Back) twice to return to the Main menu.

Note: An installation test is not terminated by a system reset. The test can only be terminated from the test menu by unchecking the device in test.

Performing an output test

The output test is used to test outputs OUT1, OUT2, and OUT3 for the selected module.

To perform an output test:

1. Select Test from the Main menu, and then select Output Test.
2. Select the device that you want to test.

   The warning indicator flashes slowly to indicate test mode.
3. Select the outputs that you want to test.

   Select ON to start the test and OFF to end the test.
4. Press F2 (Cancel) to end the test.

Outputs will return to their original state when the test ends.

Note: A command module can also perform additional output tests on legacy devices. See your device documentation for further information.

Performing an input test

The input test is used to test inputs IN1 and IN2 for the selected module.

To perform an input test:

1. Select Test from the Main menu, and then select Input Test.
2. Select the device that you want to test.

   The warning indicator flashes slowly to indicate test mode.
3. Change the state of the input and check that the state is updated on the display (this may take a few seconds).

   There are three possible input states; ON, OFF, and Open Circuit.
4. Press F2 (Cancel) to end the test.

Note: Return the input to its default state before ending the test. If not, any configured input functionality may be activated when the test ends.

Performing a user interface test

The User Interface Test is used to test the module LED indicators, screen, and buttons. The available test options vary depending on the type of module selected, as shown below.

Table 18: User interface test options

Option	Devices	Description
LED indicators test	All devices	Tests the LED indicators. All LED indicators are activated for the duration of the test.
Screen test [1]	Display modules	Tests the display. The colour background changes on the display (cycling through available colours) for the duration of the test.
Keys test	Display modules	Tests the buttons. Press a button to see the functionality of the button confirmed on the display.

[1] Standard and command display modules only.

To perform a user interface test:

1. Select Test from the Main menu, and then select User Interface Test.
2. Select All Devices or List of Devices.

   Selecting All Devices tests all modules on the loop. Selecting List of Devices allows you to select specific modules to test (by using the left and right arrows, you can view the list of clusters).
3. Select the test that you want to perform, and then press Enter to start the test.
4. Press Enter again to end the test.
5. Press F3 (Exit) to return to the Main menu.

Performing a diagnostics test

The diagnostics test is used to perform an auto-diagnostic procedure on compatible legacy devices. Devices must be tested individually.

To perform a diagnostics test:

1. Select Test from the Main menu, and then select Diagnostics.
2. Select the legacy devices that you want to test, and then press Enter to start the test.

   The warning indicator flashes slowly to indicate test mode.

   The test status is displayed as Running (test in progress) or No test (test not supported by this device type). Once the test has been completed, it will indicate Pass or Fail.
3. Press F3 (Exit) to return to the Main menu.

The Reset menu

Performing a system reset

Use the Reset menu to perform a system reset on a single device or the whole installation. System events that have not been resolved will continue to be reported after reset.

Caution: Investigate all fire alarms and faults before resetting the system.

To reset the detection system and clear system events:

1. Select Reset from the Main menu, and then select List of Devices or All Devices.

   Selecting List of Devices allows you to select specific modules to reset. Selecting All Devices resets all modules on the loop.

2. Press Enter to reset the selected devices.

After the reset completes, the home screen is displayed.

Note: Disablements and tests are not terminated by a reset.

The Enable/Disable menu

Disabling a device

Caution: To prevent accidental alarms, only disable a device during scheduled service or maintenance periods.

Use the Enable/Disable menu to disable a device. A disabled device does not report alarms or faults (but logs them in the event log).

Notes:

A disabled device will activate any output configured as General Fault or Disable to signal its non-functional status to the main fire alarm system.

If a disabled device loses power (due to a power failure), the device will be enabled at power up.

Display modules in a cluster with any disabled device will also activate any output configured as general fault.

A disabled detector continues to operate normally, but its events are not indicated. For example, faults and alarms are detected but are not indicated (they are added to the event log).

Note: When a detector is disabled, the detector Warning LED is steady and the disablement is confirmed on the display module LCD.

To disable a device:

1. Select Enable/Disable from the Main menu.
2. Select and check the device that you want to disable or press F1 (Go To) to search for a device by the device address.
3. Press F2 (Back) twice to return to the Main menu screen.

Enabling a previously disabled device

Caution: To prevent accidental alarms when enabling a previously disabled detector, first ensure that the detector output level (DLevel) is lower than the fire levels (Alarm 2, Alarm, Prealarm, Alert) – press F1 (Status) from the home screen to view the device status details.

To enable a previously disabled device:

1. Select Enable/Disable from the Main menu.
2. Select and uncheck the device that you want to enable or press F1 (Go To) to search for a device by the device address.
3. Press F2 (Back) twice to return to the Main menu screen.

Access level 3 user operation and configuration

This access level is restricted and is reserved for authorized users trained to configure the detection system. The default access code for this level is 3333.

In addition to those tasks described in Access level 2 user operation and configuration on page 45, this level lets you:

- Configure the date and time.
- Configure the device settings (inputs, outputs, etc.)
- Configure the detection settings (alarm levels, delays, flow, etc.)
- Configure the communications settings (network setup, TCP/IP, etc.)

The Main menu

The Main menu for this access level is shown below.

Figure 24: Access level 3 Main menu

General Settings menu

Use the General Settings menu to set the date and time.

For more information on the other options in this menu, see Access level 2 user operation and configuration on page 45.

Changing the date and time

Use the Date and Time menu to change the date and time. When the date and time are changed, the internal clock for all devices in the network is set to the new values. Set these values correctly as they are used to record events in the event log.

Note: If the module loses power for more than 10 minutes, the last known date and time are used the next time the module starts up.

To change the date:

1. Select General Settings from the Main menu, and then select Date and Time.
2. Select Date and enter the date in the required date format.

   The configured date format is displayed above the date field but cannot be changed from this menu. To change the date format, select General Settings from the Main menu, and then select Localization.
3. Press F1 (Set) to save your changes and exit to the previous screen.

To change the time:

1. Select General Settings from the Main menu, and then select Date and Time.
2. Select Time and enter the time in the required time format.

   The configured time format is displayed above the time field but cannot be changed from this menu. To change the time format, Select General Settings from the Main menu, and then select Localization.
3. Press F1 (Set) to save your changes and exit to the previous screen.

The Device Settings menu

Use the Device Settings menu to add a device description, to view or configure latching status, inputs and outputs, to load and save configuration files, and to return all settings to the factory default values.

For more information on the other options in this menu, see Access level 2 user operation and configuration on page 45.

Adding a device description

Use the Device Details menu to add a description to a device.

To add a device description:

1. Select Device Settings from the Main menu, and then select Device Details.

   A list of devices is displayed.
2. Select the device that you want to view or press F1 (Go To) to search for a device by the device address.

   The device type details are displayed.
3. Select Text, and then add a device description (max. 16 characters).
4. Press F1 (Save) to save your changes and exit to the previous screen.
5. If you have no other configuration changes to make, then press F1 (Apply) from the Main menu or the submenu to apply the changes to the system.

Changing the latching status

Use the Latching Status menu to configure the alarm and fault latching status (on or off) for the selected device. Configurable options are shown in the table below.

Table 19: Latching status

Option	Description
Latching Alarms [1]	When alarm latching is enabled, alarm notifications remain active until a system reset is executed in the module generating the alarm condition. When alarm latching is disabled, alarm notifications end as soon as the alarm condition ends.
Latching Faults	When fault latching is enabled, fault notifications remain active until a system reset is executed in the module generating the fault condition. When fault latching is disabled, fault notifications end as soon as the fault condition ends.

[1] Detector modules only.

To configure the latching status:

1. Select Device Settings from the Main menu, and then select Latching Status.
2. Select the device that you want to view or press F1 (Go To) to search for a device by the device address.
3. Select the latching option that you want configure and press Enter to check (enable) or uncheck (disable) the option.
4. Press F1 (Save) to save your changes and exit to the previous screen.
5. If you have no other configuration changes to make, then press F1 (Apply) from the Main menu or the submenu to apply the changes to the system.

Configuring the inputs

Use the Inputs menu to configure module inputs. Configurable options are shown in the table below.

Table 20: Configurable options for inputs

Option	Description
Influence	Configures how the input affects other devices in the system. Local only affects the local device (this is the default setting). Cluster applies the configured input functionality to all modules in the cluster.
Function	Configures the functionality. See Table 21 on page 63 for more information.

To configure inputs:

1. Select Device Settings from the Main menu, and then select Inputs.
2. Select the device that you want to view or press F1 (Go To) to search for a device by the device address.
3. Select the input that you want configure, and then configure the Influence and Function fields as required.

   See Table 21 on page 63 for more information on input functionality.
4. Press F1 (Save) to save your changes and exit to the previous screen.
5. If you have no other configuration changes to make, then press F1 (Apply) from the Main menu or the submenu to apply the changes to the system.

The configurable options for the input functionality are shown in the table below. All inputs can be configured for Local or Cluster influence.

Table 21: Input functionality

Function	Description
Unused	The input is not used (this is the default setting).
Battery Check	When the input deactivates, the module generates a fault condition (battery fault).
Mains Check	When the input deactivates, the module generates a fault condition (mains voltage fault). The device or devices affected by the configured influence enter power save mode (if configured to do so).
Remote Reset	When the input activates, the device or devices affected by the configured influence are reset.
Remote Disable	When the input activates, the device or devices affected by the configured influence are disabled.
Rem. Day/Night [1]	Remote Day/Night. When the input activates, the device or devices affected by the configured influence are set to day mode. When the input is deactivated, they are set to night mode.

[1] Only available for detector modules.

Notes

- When a function is enabled for a given input, any previous configuration using that input is automatically disabled.
- An open circuit in an input will be indicated as an Input Open Circuit fault.
- Avoid configuring two or more inputs with the same functionality (this may create conflicts).
- Inputs and input functionality for legacy devices may vary from those described here. Refer to the corresponding device installation manual for more information.

Configuring the outputs

Use the Outputs menu to configure module outputs. The default output settings are:

- Output 1 is set to General Fault
- Output 2 is set to Prealarm
- Output 3 is set to Fire Alarm

Configurable options are shown in the table below.

Table 22: Configurable options for outputs

Option	
Influence	Configures how the output is affected by other devices in the system. Local is only affected by the local device (this is the default setting). Cluster applies the configured output functionality from any module in the cluster. External applies the configured output functionality to another module in the cluster (the module address must be defined in External Addr.).
External Addr.	Configures the address of the impacted module when Influence is set to External.
Function	Configures the functionality. See Table 23 on page 65 for more information.

To configure outputs:

1. Select Device Settings from the Main menu, and then select Outputs.
2. Select the device that you want to view or press F1 (Go To) to search for a device by the device address.
3. Select the output that you want configure, and then configure the Influence, External Addr., and Function fields as required.

   See Table 23 on page 65 for more information on output functionality.
4. Press F1 (Save) to save your changes and exit to the previous screen.
5. If you have no other configuration changes to make, then press F1 (Apply) from the Main menu or the submenu to apply the changes to the system.

The configurable options for the output functionality are shown in the table below.

Table 23: Output functionality

Function	Description
General Alarm	The output activates when the applicable device or devices are in any alarm state.
Alert	The output activates when the applicable device or devices are in Alert/Aux. Alarm state.
Prealarm	The output activates when the applicable device or devices are in Prealarm state.
Alarm	The output activates when the applicable device or devices are in Fire Alarm state.
Alarm 2	The output activates when the applicable device or devices are in Fire Alarm 2 state.
General Fault	The output deactivates when the applicable device or devices are in any fault state, disabled, or in test mode. This behaviour is opposite to outputs configured with any other function.
Battery Fault	The output activates when the applicable device or devices are in Battery Fault state.
Mains Fault	The output activates when the applicable device or devices are in Mains Fault state.
Power Supply Fault	The output activates when the applicable device or devices are in Power Supply Fault state.
Flow Fault	The output activates when the applicable device or devices are in Flow Fault state.
Filter Blocked	The output activates when the applicable device or devices are in Filter Blocked fault state
Filter Removed	The output activates when the applicable device or devices are in Filter Removed fault state.
Laserhead Fault	The output activates when the applicable device or devices are in Laserhead Fault state.
Fan Fault	The output activates when the applicable device or devices are in Fan Fault state.
Cover Removed	The output activates when the applicable device or devices are in Cover Removed fault state.
General Warning	The output activates when the applicable device or devices are in any Warning state.
Disable	The output activates when the applicable device or devices are disabled.
Test	The output activates when the applicable device or devices are in any Test state.

Notes

- Output 1 is set to General Fault on display modules and is not configurable. If the display is a command module, any fault detected by any device in the SenseNET network will activate this output.
- A display output configured with Local influence and an Alarm function will activate if any applicable alarm type is detected by any detector in the cluster (or SenseNET network, if the display is a command module).
- When a function is enabled for a given output, any previous configuration using that output is automatically disabled.
- Outputs and output functionality for legacy devices may vary from those described above. Refer to the corresponding device installation manual for more information.

Saving and loading configuration files

Use the Load/Save menu to save a module configuration file, to load a module configuration from a file, or to restore the cluster configuration after maintenance.

Note: This option can be used to quickly copy a configuration from one device to another.

To save a module configuration file:

1. Remove the display cover, insert a USB flash drive into the USB connector, and replace the cover.
2. Select Device Settings from the Main menu, and then select Load/Save Settings.
3. Select Save to File.
4. Select the device that you want to view or press F1 (Go To) to search for a device by the device address.

   The configuration file is saved as a comma separated (CSV) file to the following folder on the USB flash drive:

   _ASPIRATION\Config\

   This folder is created automatically on the flash drive. The name of the saved file takes the format:

   AAA_YYYYMMDD_HHMM_TT.csv

   Where AAA is the device address, YYYYMMDD is the current date, HHMM is the current time, and TT is a the device type identification code.
5. Press F3 (Exit) to return to the Main menu.

To load a module configuration file:

1. Remove the display cover, insert a USB flash drive into the USB connector, and replace the cover.
2. Select Device Settings from the Main menu, and then select Load/Save Settings.
3. Select Load from File.
4. Select the device that you want to view or press F1 (Go To) to search for a device by the device address.

   Once the device has been selected, all compatible configuration files found on the USB flash drive are displayed on the screen.
5. Select the configuration file to load, and then press Enter.

   The new configuration is applied automatically.

Restoring the cluster configuration

The minimum or standard display module automatically saves the configuration details for all detectors in the local cluster. If one or more detectors in the cluster are replaced, the saved configuration can be quickly restored (maintaining the original addresses).

To restore the cluster configuration

1. Select Device Settings from the Main menu, and then select Load/Save Settings.
2. Select Restore Cluster Configuration, and then click OK.

   The saved configuration is applied automatically.

Restoring the factory default settings

Use the Factory Default menu to restore a device to the original factory default settings.

To restore to the factory default settings:

1. Select Device Settings from the Main menu, and then select Factory Default.
2. Select All Devices or List of Devices.

   Selecting All Devices restores all modules on the loop. Selecting List of Devices allows you to select specific modules to restore.
3. Press Enter to restore the selected devices.

The Detection Settings menu

Use the Detection Settings menu to configure alarm levels, alarm delays, ClassiFire parameters, day and night settings, flow setup, referencing, and MatrixScan.

Configuring the alarm levels

Use the Alarm Levels menu to configure the parameters used by ClassiFire to calculate the alarm threshold levels. Configurable options are shown in the table below.

Table 24: Alarm levels configuration

Option	Description
Alarm 2 Level	Configures the value used to calculate the Fire Alarm 2 alarm level threshold. This is an absolute level and is not changed by the learn procedure. Possible values: 0.10 to 25 (default 20).
Alarm Level	Configures the value used to calculate the Fire Alarm alarm level threshold during the learn procedure (intermediate, fast). Possible values: 8 to 10 (default 8).
Prealarm Level	Configures the value used to calculate the Prealarm level threshold during the learn procedure (intermediate, fast). Possible values: 3 to 8 (default 6).
Alert Level	Configures the value used to calculate the Alert/Aux. Alarm level threshold during the learn procedure (intermediate, fast). Possible values: 2 to 10 (default 10).
Alarm Factor [1]	Configures the detector sensitivity. This value affects the calculation of all alarm levels except Fire Alarm 2. A lower value configures a higher sensitivity, a higher value configures a lower sensitivity. Possible values: 0 to 8 (default 4). See Table 25 on page 69 for suggested settings.
Cascading Alms	Configures when a configured fire alarm delay starts. Check this box to start the fire alarm delay countdown when the prealarm delay elapses.

[1] The working alarm factor value may be higher than the configured value as the ClassiFire algorithm automatically adjusts the value based on the environmental conditions at the end of the FastLearn procedure.

Table 25: Suggested alarm factor settings

Alarm factor	Sensitivity	Probability of nuisance alarm	Suggested protected area
0	Very high	Once per year	Semiconductor manufacturing clean room
1	High	Once per 5 years	Computer room
2	High	Once per 10 years	Non-smoking office
3	High	Once per 50 years	Clean factory
4	Medium	Once per 1,000 years	Warehouse
5	Medium	Once per 5,000 years	Warehouse with diesel trucks operating
6	Medium	Once per 10,000 years	Warehouse with diesel trucks operating
7	Low	Once per 20,000 years	Warehouse with diesel trucks operating
8	Low	Once per 100,000 years	Warehouse with diesel trucks operating

To configure the alarm levels:

1. Select Detection Settings from the Main menu, and then select Alarm Levels.
2. Select the device that you want to view or press F1 (Go To) to search for a device by the device address.
3. Enter the required values for the alarm levels and the alarm factor.
4. Select and check Cascading Alms, if this option is required.
5. Press F1 (Save) to save your changes and exit to the previous screen.
6. If you have no other configuration changes to make, then press F1 (Apply) from the Main menu or the submenu to apply the changes to the system.

Configuring the alarm delays

Use the Alarm Delays menu to configure the delays used by ClassiFire for alarm signalling. Configurable options are shown in the table below.

Table 26: Alarm delays configuration

Option	Description
Alarm 2 Delay	Configures the Fire Alarm 2 delay (0 to 90 seconds)
Alarm Delay [1]	Configures the Fire Alarm delay (0 to 90 seconds)
Prealarm Delay	Configures the Prealarm delay (0 to 90 seconds)
Alert Delay	Configures the Alert/Aux. Alarm delay (0 to 90 seconds)
Delay Override [2]	Configures the delay override. Check this option to ignore the configured Fire Alarm 1 delay when fire alarm and prealarm levels are exceeded within three seconds of each other

[1] The Fire Alarm delay countdown may start after the Prealarm countdown elapses if Cascading Alarms is enabled (in the Alarm Levels menu).
[2] This option has priority over Cascading Alarms configuration.

To configure the alarm delays:

1. Select Detection Settings from the Main menu, and then select Alarm Delays.
2. Select the device that you want to view or press F1 (Go To) to search for a device by the device address.
3. Enter the required values for the alarm delays.
4. Select and check Delay Override, if this option is required.
5. Press F1 (Save) to save your changes and exit to the previous screen.
6. If you have no other configuration changes to make, then press F1 (Apply) from the Main menu or the submenu to apply the changes to the system.

Configuring ClassiFire operation

Use the ClassiFire menu to configure ClassiFire parameters and to force a FastLearn to start or restart. Configurable options are shown in the table below.

Table 27: ClassiFire configuration

Option	Description
Auto FastLearn	Configures Auto FastLearn. If checked, Auto FastLearn starts each time the fan starts (or restarts).
Demo Mode	Configures the use of intermediate learning mode. If checked, the intermediate learn procedure is omitted and the detector enters normal mode after FastLearn. While active, Demo mode is indicated by the Warning LED and on the display module LCD.
LDD Enable [1]	Configures laser dust discrimination (LDD). If checked, the ClassiFire uses LDD, a special dust discrimination algorithm. Note: Laser Dust Discrimination (LDD) increases the response time of the detector slightly, while greatly reducing the likelihood of nuisance alarms due to dust ingress. LDD may be disabled in very clean rooms for a slightly faster response to smoke. Disabling LDD is not recommended for areas other than manufacturing clean rooms.
Start FastLearn	Manually starts FastLearn.

To configure ClassiFire:

1. Select Detection Settings from the Main menu, and then select ClassiFire.
2. Select the device that you want to view or press F1 (Go To) to search for a device by the device address.
3. Enter the required configuration for ClassiFire.
4. Press F1 (Save) to save your changes and exit to the previous screen.
5. If you have no other configuration changes to make, then press F1 (Apply) from the Main menu or the submenu to apply the changes to the system.

To start FastLearn:

1. Select Detection Settings from the Main menu, and then select ClassiFire.
2. Select the device that you want to view or press F1 (Go To) to search for a device by the device address.
3. Select Start FastLearn, and then press Enter.

Caution: During FastLearn the detector is not fully operational (accurate detection is not guaranteed).

Configuring day and night operation

Use the Day/Night menu to configure the day and night sensitivity parameters used by ClassiFire. Configurable options are shown in the table below.

Note: If an input is used to control day and night switching, it takes priority over any configuration defined here.

Table 28: Day/Night configuration

Option	Description
D/N Enabled	Configures day and night sensitivity operation. If checked, ClassiFire changes between day mode and night mode at the times configured in Day Start Hour and Night Start Hour. If not, ClassiFire continues in day mode.
Day Start Hour	Configures the day mode start time.
Night Start Hour	Configures the night mode start time.

To configure Day/Night functionality:

1. Select Detection Settings from the Main menu, and then select Day/Night.
2. Select the device that you want to view or press F1 (Go To) to search for a device by the device address.
3. Select and check D/N Enabled, and then configure the day and night start times.
4. Press F1 (Save) to save your changes and exit to the previous screen.
5. If you have no other configuration changes to make, then press F1 (Apply) from the Main menu or the submenu to apply the changes to the system.

Configuring flow parameters

Use the Flow Setup menu to configure detector flow parameters and to force a pipe calibration (required for new or changed piping). Configurable options are shown in the table below.

Note: Flow parameter and pipe calibration configuration may differ for legacy devices – see your device installation manual for more information.

Table 29: Flow parameters

Option	Description
Flow High Limit	Configures the flow high limit percentage (used to indicate a Flow High fault). Possible values: 0 to 99 (default 20).
Flow Low Limit	Configures the flow low limit percentage (used to indicate a Flow Low fault). Possible values: 0 to 99 (default 20).
Fan Speed	Configures the fan speed. Possible values: 1 to 16 (default 6).
Power Save	Configures the response to Power Save commands. If checked, the device will accept Power Save commands.
Flow Flt. Delay	Configures the Flow Fault delay (in seconds). Possible values: 0 to 240 (default 120).
Start Pipe Calibration	Manually starts pipe calibration.
Filter Expirat.	Configures an optional filter expiration date (MM/YY). A Filter Fault is indicated at 10:00 am on the first day of the month configured.

To configure flow parameters:

1. Select Detection Settings from the Main menu, and then select Flow Setup.
2. Select the device that you want to view or press F1 (Go To) to search for a device by the device address.
3. Enter your configuration changes.
4. Press F1 (Save) to save your changes and exit to the previous screen.
5. If you have no other configuration changes to make, then press F1 (Apply) from the Main menu or the submenu to apply the changes to the system.

To start pipe calibration:

1. Select Detection Settings from the Main menu, and then select Flow Setup.
2. Select the device that you want to view or press F1 (Go To) to search for a device by the device address.
3. Select Start Pipe Calibration, and then press Enter.

Pipe calibration takes approximately 60 minutes and the remaining time is displayed on the detector status screen (see “Detector status” on page 46).

The detector system operates normally during pipe calibration.

Referencing another detector

Use the Referencing menu to configure referencing parameters for ClassiFire.

Note: Changes to any reference parameter will initiate a FastLearn procedure.

When referencing is enabled ClassiFire uses the local detection level and the referenced level (from another detector) in its calculations. A fault is indicated if the reference value is not received from the configured detector after 60 seconds. Configurable options are shown in the table below.

Table 30: Referencing configuration

Option	Description
Ref. Enabled	Configures referencing operation. If checked, ClassiFire will reference the detection level from the configured detector in its calculations.
Det. Address	Configures the address of the detector used for referencing.
Level	Configures an increase to the received reference value.
Back-off	Configures the delay introduced in referencing calculations (enter 0 for no delay).

To configure referencing:

1. Select Detection Settings from the Main menu, and then select Referencing.
2. Select the device that you want to view or press F1 (Go To) to search for a device by the device address.
3. Enter your configuration changes.
4. Press F1 (Save) to save your changes and exit to the previous screen.
5. If you have no other configuration changes to make, then press F1 (Apply) from the Main menu or the submenu to apply the changes to the system.

Configuring MatrixScan

Use the MatrixScan menu to configure virtual point detectors for the detection system where the pipe networks for two physical detectors intersect (that is, two detectors have sampling holes in the same area).

Up to 15 physical detectors can be added to a MatrixScan network, allowing for a maximum of 105 virtual detectors.

Virtual detectors are assigned a virtual detector number and generate an alarm at the command module when both of the linked physical detectors generate an alarm at the same time.

Configurable options are shown in the table below.

Table 31: MatrixScan configuration

Option	Description
Enabled	Configures MatrixScan operation. If checked, all configured virtual detectors are enabled.
Base Address	Configures the address of the first detector to be included in the MatrixScan map. Detectors with lower addresses may not be used to define virtual detectors.
Link Map	Configures the links between the physical detectors in the MatrixScan network. Links are colour-coded as follows: Red: A virtual detector is enabled White: A combination of detectors are available Grey: One or both detectors do not exist

To configure MatrixScan:

1. Select Detection Settings from the Main menu, and then select MatrixScan.
2. Enable MatrixScan, enter the Base Address to use, and then press Enter.
3. Use the arrow keys to configure the links between the physical detectors in the MatrixScan map.

   The physical detector addresses and the assigned virtual detector address are displayed to the left of the matrix. See the notes below for additional information on address requirements for MatrixScan.
4. Press F1 (Save) to save your changes and exit to the previous screen.
5. If you have no other configuration changes to make, then press F1 (Apply) from the Main menu or the submenu to apply the changes to the system.

Notes:

- We recommend that you use the address range 1 to 15 for physical detectors in a MatrixScan map. The command display module can use any unused address in the range 1 to 127.
- Virtual detectors are automatically assigned addresses in the range of 16 to 105 (calculated from the physical detector addresses and the configured Base Address). The virtual detector address is not configurable.
- In some cases a virtual detector may be automatically assigned an address already assigned to a command display module. If this happens a Repeat Address error is generated and the address for the command display module should be changed.
- If a physical detector address conflicts with a virtual detector address or if a virtual detector address is greater than 127, the virtual detector is ignored (no alarms will be generated against the virtual detector).
- The device text for a virtual detector is not configurable (the format is "Detector XXX" where XXX is the virtual detector address).

Configuring a detector status baseline

Use the Baseline menu to save a detector status baseline. The baseline is used for comparison purposes against current detector status details.

To save the detector baseline:

1. Select Device Settings from the Main menu, and then select Detection Settings.
2. Select Baseline, and then select Save Baseline

   A list of detectors is displayed.
3. Select the detector that you want to view or press F1 (Go To) to search for a detector by the device address.

   When prompted, use the arrow keys to select OK and save the baseline.
4. Press F3 (Exit) to return to the Main menu.

The Communications menu

Use the Communications menu to configure communications options for the network, building management system, TCP/IP, email accounts or server, and to remove a USB device.

Configuring the network

Use the Network Setup menu to configure network settings (including SenseNET and SenseNET+, where applicable) and to scan for devices. Configurable options are shown in the table below.

Note: Command display modules scan the entire network. Standard display modules only scan the cluster.

Table 32: Network configuration

Option	Description
Scan for Devices [1]	Scans for connected devices. Devices in a cluster are detected automatically when connected to a display module (no scan is required). When disconnecting a cluster device, perform a scan to update the network map (if a scan is not performed, the display indicates a Communications fault). Note: When a scan is initiated from a command module, connected standard display modules will also scan their associated cluster and update the network map for the cluster.
SN Looped Bus [1]	Configures the SenseNET loop protocol. If checked, the network uses a Class A closed loop topology.
SN Poll Timeout [1]	Configures the maximum response time (in milliseconds) for a SenseNET status query. Warning: Do not exceed the maximum recommended settings included in “Configuring the Poll Timeout setting” on page 80.
SN+ Looped Bus [2]	Configures the SenseNET+ protocol. If checked, the cluster uses a Class A closed loop topology.
Leg. Time Sync [1]	Configures the date and time synchronization for legacy detectors in the network. If checked, the date and time in legacy detectors is synchronized with the command module. Note: Date and time synchronization erases any chart record information stored by the legacy detectors.
2nd Cmd Module [1]	Configures the use of a second command module in a SenseNET network where redundancy is required. If checked, the command module acts as the secondary command module. See “Using a secondary command module” on page 77 for more information.

[1] Command modules only.
[2] Minimum and standard display modules only.

To configure the network:

1. Select Communications from the Main menu, and then select Network Setup.
2. Enter your configuration changes.
3. Press F1 (Save) to save your changes and exit to the previous screen.
4. If you have no other configuration changes to make, then press F1 (Apply) from the Main menu or the submenu to apply the changes to the system.

Using a secondary command module

Two command modules can be included in a SenseNET network to provide redundancy, if required.

The first command module acts as the primary module, controlling and monitoring the network, while the second command module remains in listening mode. When the second command module detects that the primary command module is not operational, it assumes control of the network.

Notes:

- This option only applies to command modules. It must be disabled in the primary command module and enabled in the secondary command module.
- If the primary command module is recovered, then the secondary module returns to listening mode.
- The primary command module configures the secondary command module remotely. It appears in the device list after a network scan.

Configuring BMS operation

Use the BMS menu to configure building management system settings. This feature is only available for command display modules. Configurable options are shown in the table below.

Table 33: BMS configuration

Option	Description
Protocol	Indicates the Modbus protocol (read only).
Channel	Configures the transmission channel (None or IP). The default setting in None. [1]
IP Address	Configures the IP address. Used to restrict Modbus to a specific client. The default setting is 0.0.0.0 (allow connections from any client).

[1] None indicates that BMS is not enabled

To configure BMS operation:

1. Select Communications from the Main menu, and then select BMS.
2. Enter your configuration changes.
3. Press F1 (Save) to save your changes and exit to the previous screen.
4. If you have no other configuration changes to make, then press F1 (Apply) from the Main menu or the submenu to apply the changes to the system.

Configuring TCP/IP

Use the TCP/IP menu to configure TCP/IP settings. These settings are important for establishing remote connections and for email notifications. Configurable options are shown in the table below.

Note: If your network is protected by a firewall, the port configuration in your firewall may need to be updated to allow local communication with external software.

Table 34: TCP/IP configuration

Option	Description
IP Address	Configures the IP address
Netmask	Configures the network mask
Gateway	Configures the default gateway
TCP Port	Configures the TCP port (for software connections)
MAC Address	Displays the MAC address

To configure TCP/IP:

1. Select Communications from the Main menu, and then select TCP/IP Setup.
2. Enter your configuration changes.
3. Press F1 (Save) to save your changes and exit to the previous screen.
4. If you have no other configuration changes to make, then press F1 (Apply) from the Main menu or the submenu to apply the changes to the system.

Configuring email accounts

Use the Email Accounts menu to configure email account settings for event notifications. Up to four email accounts can be configured. Configurable options are shown in the table below.

Note: The TCP/IP and email server information must be configured for email notifications to be sent.

Table 35: Email account configuration

Option	Description
Email Address	Configures the email address (max. 48 characters).
Alarm	Configures alarm notifications. If checked, alarm notifications will be sent to the configured email address.
Fault	Configures fault notifications. If checked, fault notifications will be sent to the configured email address.
Warning	Configures warning notifications. If checked, warning notifications will be sent to the configured email address.

To configure email accounts:

1. Select Communications from the Main menu, and then select Email Accounts.
2. Select the account that you want to configure.
3. Enter your configuration changes.
4. Press F1 (Save) to save your changes and exit to the previous screen.
5. If you have no other configuration changes to make, then press F1 (Apply) from the Main menu or the submenu to apply the changes to the system.

Configuring the email server

Use the Email Server menu to configure email server settings for event notifications. Configurable options are shown in the table below.

Note: Only LOGIN and PLAIN authentication methods are supported (TLS connections are not supported).

Table 36: Email server configuration

Option	Description
IP Address	Configures the SMTP server IP address.
Email Address	Configures the sender address for email notifications (max. 48 characters).
TCP Port	Configures the port to use for SMTP communications. The default setting is 25.
User	Configures user authentication (if this is supported by the email server). By default no authentication is required.
Password	Configures the password requirement if user authenticatioon is enabled. By default no password is required.

To configure the email server:

1. Select Communications from the Main menu, and then select Email Server.
2. Enter your configuration changes.
3. Press F1 (Save) to save your changes and exit to the previous screen.
4. If you have no other configuration changes to make, then press F1 (Apply) from the Main menu or the submenu to apply the changes to the system.

Removing a USB device

Use Unmount USB Device to safely remove a USB flash drive.

To remove a USB device:

1. Select Communications from the Main menu, and then select Unmount USB Device.

   Remove the USB flash drive when prompted.

Configuring the Poll Timeout setting

WARNING: To ensure that faults are reported within 100 seconds, do not exceed the maximum Poll Timeout recommended settings shown in Table 37 below. If the Poll Timeout setting is higher than indicated, faults may not be reported within 100 seconds.

Table 37: Maximum recommended Poll Timeout setting

Number of network devices	Maximum recommended setting
Up to 16	992 ms
Up to 25	672 ms
Up to 40	368 ms
Up to 74	192 ms
Up to 88	160 ms
Up to 100	128 ms
Up to 127	64 ms

The Log menu

Use the Log menu to clear the chart record, and to configure the chart record sampling rate. The chart record sampling rate is the interval between samples (in seconds) used for the chart record and is programmable for each detector.

For more information on the other options in this menu, see Access level 2 user operation and configuration on page 45.

Clearing the chart record

To clear the chart record:

1. Select Communications from the Main menu, and then select Log.
2. Select Clear Chart Record.
3. Select the device that you want to view or press F1 (Go To) to search for a device by the device address.
4. Press OK to confirm the operation.

Note: Once a chart record is cleared, the operation cannot be undone.

Configuring the chart record sample rate

To configure the chart record sampling rate:

1. Select Communications from the Main menu, and then select Log.
2. Select Chart Record Settings.
3. Select the device that you want to view or press F1 (Go To) to search for a device by the device address.
4. Select one of the available sampling rates (1, 5, 12, 30, or 60 seconds).
5. Press F1 (Save) to save your changes and exit to the previous screen.
6. If you have no other configuration changes to make, then press F1 (Apply) from the Main menu or the submenu to apply the changes to the system.

Access level 4 user operation and configuration

This access level is restricted and is reserved for authorized users trained to perform installation tasks and upgrade the detection system. The default access code for this level is 4444.

In addition to those tasks described in Access level 3 user operation and configuration on page 59, this level lets you:

- Upgrade device firmware
- Customize or restore device logos

The Main menu

The Main menu for this access level is shown below.

Figure 25: Access level 4 Main menu

The General Settings menu

Use the General Settings menu to add a custom logo to the product display or to restore the logo to the factory default.

Note: Custom logo files must be 320 x 240 pixel PNG files and be stored at the path _ASPIRATION\Logo\ on a USB flash drive.

For more information on the other options in this menu, see Access level 2 user operation and configuration on page 45.

Adding a custom logo

To add a custom logo:

1. Remove the display cover, insert a USB flash drive into the USB connector, and replace the cover.
2. Select General Settings from the Main menu, and then select Customize/Restore Logo.
3. Select Customize Logo.
4. Select the device that you want to view or press F1 (Go To) to search for a device by the device address.

   A list of the logos included on the USB flash drive is displayed.
5. Select the logo that you want to add, and then press Enter.

Restoring the default logo

To restore the default logo:

1. Select General Settings from the Main menu, and then select Customize/Restore Logo.
2. Select Restore Logo.
3. Select the device that you want to view or press F1 (Go To) to search for a device by the device address.
4. Press OK to confirm the operation.

Press exit to view the home screen. The default logo is displayed if there are no active events.

The Device Settings menu

Use the Device Settings menu to upgrade device firmware from a standard or command display module. To upgrade firmware from a minimum display module, see “Upgrading device firmware from a minimum display” on page 85.

For more information on the other options in this menu, see Access level 2 user operation and configuration on page 45.

Upgrading device firmware from a standard or command display module

Use the Upgrade menu to upgrade device firmware. All devices in a cluster are upgraded simultaneously.

Firmware upgrades are typically distributed as a ZIP file. The ZIP file must be unzipped to a USB flash drive at _ASPIRATION\Update\ before starting the upgrade procedure.

To upgrade all devices in a cluster:

1. Unzip the upgrade folder to a USB flash drive, as described above.
2. Remove the display cover, insert a USB flash drive into the USB connector, and replace the cover.
3. Select Device Settings from the Main menu, and then select Upgrade.
4. Select the device that you want to view or press F1 (Go To) to search for a device by the device address.

   The selected device must be a display module. All devices included in the display module cluster will be upgraded.
5. When prompted, browse to and select the folder on the USB flash drive that contains the firmware upgrade files.

   The upgrade procedure may take a long time to complete. If necessary, press Cancel to safely abort the upgrade.
6. After completion, follow the onscreen instructions to restart the system.

Upgrading device firmware from a minimum display module

Follow the instructions below to upgrade device firmware from a minimum display module. All devices in a cluster are upgraded simultaneously.

Firmware upgrades are typically distributed as a ZIP file. The ZIP file must be unzipped to a USB flash drive at _ASPIRATION\Update\AutoUpgrade before starting the upgrade procedure.

To upgrade the firmware for a minimum display:

1. Unzip the upgrade folder to a USB flash drive, as described above.
2. Turn off the minimum display module.
3. Remove the display cover, insert a USB flash drive into the USB connector, and replace the cover.
4. Turn on the minimum display module.

   The upgrade starts automatically. Flashing LEDs on the display indicate that the upgrade is in progress. Steady LEDs on the display indicate that the upgrade is complete.
5. When the upgrade is complete, restart the minimum display module.

Note: After the upgrade a file named lock.lck is saved to the USB flash drive. Delete this file from the USB flash drive before using the flash drive to upgrade the firmware in another minimum display module (if the file is not deleted, the firmware is not upgraded).

Commissioning

Overview

Perform the following tasks when commissioning the detection system:

- Inspect the installation
- Check the system configuration
- Perform commissioning tests
- Check system connectivity (where applicable)

Installation inspection

Inspect the installation to confirm that it has been designed and installed correctly for the intended application.

- When using the detector for high and enhanced sensitivity applications (Class A or Class B), ensure that the installation conforms to the design specification.
- When using the detector to replace point type detectors (Class C), ensure that the installation conforms to all relevant local or national standards.
- When using the detector as a primary sampling system, ensure that the pipe and sample points are installed correctly onto the air handling unit within the airflow. Ensure that the airflow in the pipe is balanced if using multiple air handling units.
- Check that the installation is clean and that no construction debris remains.
- Check that the pipe network is correctly installed that all hole positions and sizes are correct.
- Check that all sampling points are clearly identified and that there are no obstructions to the sampling points or remote capillaries.
- Check all electrical wiring and connections.
- Check that power supplies are sufficient for the installation and that they provide the required battery standby period.

Configuration check

Ensure that the following have been correctly configured before performing commissioning tests:

- Fire alarm thresholds and sensitivity settings
- Alarm delays
- Airflow parameters
- Network parameters
- Any other configuration options for the intended application.

Finally, always change the default access codes (for all access levels) to prevent unauthorized access (see “Access codes” on page 39 for details on how to do this).

Commissioning tests

Ensure that the protected area is in its normal operational state before any commissioning tests are performed. Commissioning must include sufficient testing to verify that sampling holes are fully functional. Results from the tests should be recorded for future reference.

Commissioning tests should include (but are not limited to):

- Maximum smoke transport time
- Fault detection
- Alarm detection (smoke tests)

Acclimation period

The detector operates at a reduced sensitivity for approximately 24 hours. ClassiFire handles the appropriate day and night sensitivity settings, where required. All air handling units, thermostats, and other systems that impact the operating environment should be turned on to reflect normal operating conditions.

FastLearn starts automatically if the detector is new (or restarting) and if Auto FastLearn is enabled. The FastLearn process lasts approximately 15 minutes and is followed by approximately 24 hours of intermediate learning (if Demo mode is not enabled).

Maximum smoke transport time

Maximum smoke transport time is measured by introducing a small quantity of smoke into the furthest sample hole and then measuring the time between first introducing the smoke and observing a response at the detector.

The results of this test and the calculated maximum transport time from PipeCAD must be recorded on the check sheet. Measured transport time less than the calculated time is acceptable.

To measure the maximum transport time:

1. Determine the furthest sampling point from the detector.
2. Allow test smoke to enter the pipe at the furthest sampling point.
3. Record the amount of time it takes for the detector to respond.

Notes:

Test all pipes individually to confirm full integrity.

Ensure that any measured transport time matches requirements in the installation design specification, where applicable.

Fault detection

Block and unblock all pipes to ensure that low flow and high flow faults are reported correctly. There is a default delay of 120 seconds before a flow fault is reported (this delay is configurable).

Disconnect the battery and then the mains power supply to ensure that power supply faults are reported correctly.

Alarm detection (smoke tests)

Caution: These tests may activate installed point detectors at the site. Always ensure that site personnel are consulted before smoke tests are performed and that all measures are taken to avoid unwanted alarm activations.

Smoke tests measure the amount of time to activate alarm states. The test should be repeated at least three times with consistent results.

Typical smoke tests include:

- Wire burn tests for Class A and Class B installations
- Smoke pellet tests for Class C installations

Use of canned smoke is not recommended to test the detector as the particles don't last long enough to travel the full length of the sampling pipe.

Wire burn test

This test is typically used for Class A and Class B installations.

The wire burn test is considered the most representative test of incipient fire hazard detection in telecommunications or computer room environments.

The test is performed by applying a voltage to a piece of PVC-insulated cable. Smoke is produced from the overheated PVC insulation by evaporation and condensation of the plasticiser.

As the wire becomes hotter, hydrogen chloride (HCl) gas is emitted from the insulation. The by-products of overheated PVC insulation can be detected by the system.

Performing a wire burn test (option 1)

The following test is considered unlikely to produce hydrochloric acid vapour. This test may be undertaken in underfloor spaces or ceiling voids.

1. Connect a 2 m (6.5 ft.) length of wire to a 6 VAC source of at least 16 A rating per wire for a period of 3 minutes.
2. The system should respond within 120 seconds of cessation of energization. After this period, very little smoke is given off.

Notes:

The wire is subject to cooling if positioned in direct contact with air flows and may need to be shielded.

The wire cross-section should be AWG 10 with the following diameter and area:

- Diameter 2.59 mm (0.10189 in.)
- Cross-Section Area 5.0 mm² (0.00775 in.²)

Performing a wire burn test (option 2)

WARNING: The following test is likely to produce a sufficiently high temperature to generate small quantities of hydrogen chloride or hydrochloric acid gas. Be sure to maintain a safe distance from the wire while voltage is applied.

Perform this test in underfloor spaces or ceiling voids where rapid air flow may render the previous test unsuitable.

1. Connect a 1 m (3.25 ft.) length of wire to a 6 VAC source of at least 16 A rating per wire for a period of 1 minute.
2. The system should respond within 120 seconds of cessation of energization. After this period most of the insulation should be burned off.

Notes:

The wire cross-section should be AWG 10 with the following diameter and area:

- Diameter 2.59 mm (0.10189 in.)
- Cross-section area 5.0 mm² (0.00775 in.²)

Smoke pellet test

This test is typically used for Class C installations.

Performing a smoke pellet test

1. Place a 20 x 20 cm (7.87 x 7.87 in.) metal plate onto a 5.8 KW butane gas burner (or equivalent electrical heater), and then place a 7-9 g smoke pellet onto the plate.
2. Place a metal chimney over the pellet. The chimney should be 2 to 6 mm (0.08 to 0.24 in.) thick, at least 100 mm (3.94 in.) in diameter and 150 mm (5.9 in.) high.

   Either the base of the chimney or the metal plate should have ventilation holes.
3. Ignite the burner and start the timer when the pellet starts to produce smoke.
4. Extinguish the burner after the required time has elapsed.

   The amount of time depends on the room height and the temperature differential (the temperature difference between the level at which the test is conducted and the level at which the aspirating sampling points are mounted). See Table 38 below.

Table 38: Burn times for smoke pellet tests

Height	Temperature Differential				
	<3°C (<37.4°F)	3 to 6°C (37.4 to 42.8°F)	6 to 9°C (42.8 to 48.2°F)	9 to 12°C (48.2 to 53.6°F)	12 to 15°C (53.6 to 59°F)
3 to 5 m (9.8 to 16.4 ft.)	3s	6s	9s	12s	17s
5 to 10 m (16.4 to 32.8 ft.)	7s	13s	20s	27s	34s
10 to 15 m (32.8 to 49.2 ft.)	10s	20s	30s	40s	51s
15 to 20 m (49.2 to 65.6 ft.)	13s	27s	40s	54s	67s

Connectivity check

Ensure that communications between the detector and any fire control and indicating equipment (especially alarm and fault conditions) operate correctly.

Ensure that the network configuration setting matches the network topology (see “Configuring the network” on page 76). Remember that for a minimum display module, this can only be configured using the Remote software application.

Check any other cause and effect requirements, particularly in relation to integration with automatic suppression systems.

Chapter 4
Maintenance and troubleshooting

Summary

This chapter provides maintenance and troubleshooting procedures.

Content

Maintenance 94
Troubleshooting 97

Maintenance

Visual check

Perform a visual check to verify pipe integrity every six months.

To perform the visual check, inspect the entire piping network and check for abnormalities in the pipes, including any breaks, blockages, crimps, etc.

Battery status check

Perform a battery check by running the load with the batteries for about 1 hour. While the load is still on, measure the individual battery voltages. If any battery reads >1.5 Volts below its rated voltage, replace the battery.

Note: If any battery in a series is low, it is likely that other batteries will soon fail. Replace all the batteries of a series set when one requires replacement.

Smoke test

Perform a smoke test when the system is commissioned and then annually. See “Alarm detection (smoke tests)” on page 88 for more details.

Transport time verification test

Perform a transport time verification test when the system is commissioned and then annually. The results of the annual tests should be compared to the results recorded after commissioning the system. See “Maximum smoke transport time” on page 88 for more details.

Detector sensitivity test

Perform a detector sensitivity test within one year of installation and then every two years.

The detector employs a self-monitoring, automatically-adjusting calibration for the system. The inspection only requires a periodic visual inspection for a detector fault indication and performing the detector sensitivity test function.

If the self-monitoring feature of the system senses that the operational value of the detector head is outside its normal range, a trouble condition will be generated.

WARNING: If the operational value of the detector head is higher than 30% during 7 consecutive days, this could be an indication that the detector is contaminated by dust and requires servicing. Investigate any changes in the environment which could explain the higher operational value. If it has been determined that the detector is contaminated, please note that normal detector operation cannot be guaranteed – contact your local supplier for more information and to arrange servicing. Also take precautions to avoid or limit any future contamination.

Cleaning the detector

The outside of the detector should be cleaned with a damp cloth when necessary.

Caution: Do not use solvents to clean the detector. Use of solvents may damage the detector.

Replacing the dust filter cartridge

Replace the dust filter as described below, when required. Used dust filter cartridges are not intended for reuse and should be discarded.

The detector will indicate a Filter fault when the filter value (on the detector status screen, see “Detector status” on page 46) reaches 20%.

The detector should be powered off when replacing the dust filter to ensure that the filter status is reset.

WARNING: Health hazard: The dust in the dust filter will expose maintenance personnel to health hazards, due to the environment of the area being protected. It is recommended that suitable masks and protective clothing be worn when changing filters. Maintenance work must be performed in compliance with national and/or regional requirements and other applicable standards.

To replace the dust filter cartridge:

1. Remove the detector cover to access the dust filter cartridge.
2. Remove the screw securing the dust filter, and then remove the filter assembly from the detector.
3. Remove the plastic cover from the filter cartridge and dispose of the cartridge.
4. Fit the new cartridge into the plastic cover with IN facing toward the top of the detector as shown in Figure 26. Slide the entire assembly into the detector and make sure the cartridge is correctly installed.
5. Secure the filter assembly using a screw.

Figure 26: Replacing the dust filter

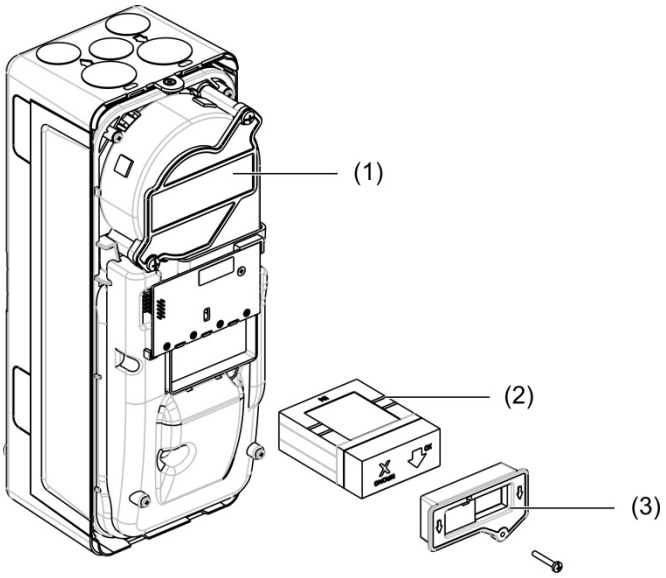

1. Detector
2. Dust filter
3. Plastic cover

Troubleshooting

This section provides some possible solutions if a problem should occur with your detection system. If the problem is not included here or, if after performing the suggested actions, the problem persists, contact your technical support office.

Table 39: Troubleshooting guide

Problem	Corrective action
Nuisance alarms occur too often	Check that the ClassiFire alarm factor setting is appropriate for the normal working environment of the protected area. Check that the detector is not in demonstration mode. This can be ascertained by viewing the event log and checking that the entry Demo mode has a higher log entry number than the most recent FastLearn start and FastLearn end entries. Remember that the log entries are in reverse order, with the most recent entries appearing first. If the log shows that demonstration mode was invoked during the last FastLearn period, start a new FastLearn and allow it to complete its 24-hour cycle. From the event log, check that at least 24 hours have elapsed since the last FastLearn end entry. Check that day/night switchover times are appropriately set to reflect active and non-active periods.
Elevated smoke levels do not generate alarms	Check that detector is not disabled or in FastLearn (if disabled, the fault indicator will be lit). Check that the detector sampling points are in the smoke stream. Check that the correct ClassiFire alarm setting has been set. Check that the detector has either had a 24-hour learning period or that it has been placed in demonstration mode.
Low mean output	Check that the dust filter does not require changing and that the air plenum chamber is clean. The chamber may become clogged when, for example, heavy building activity has occurred near the sampling pipes. If so, the chamber may require factory service. The detector is not designed to handle large quantities of coarse debris and dust.
Detector sensitivity varies over time	There are many reasons why particle densities may vary, and the ClassiFire system automatically compensates for this in order to replace the likelihood of nuisance alarms due to normal variations in background smoke density. Within limits set by the ClassiFire alarm factor, this is a normal part of the detector‘s operation.
Flow fault errors	These occur when the airflow rate into the detector exceeds the preprogramed parameters. As the detector “learns” the flow setup from the initial installation, this usually means that there has been some change in conditions. A Flow High fault may indicate that a sampling pipe is damaged, and a Flow Low fault may indicate that the pipe has been blocked (for example, by nearby building operations). If the detector input is sampled from one area and the exhaust is in another area with different pressure (for example, the detector is in a roof space and sampling from an enclosed room), this may lead to flow faults. In this case, it would be necessary to lead a pipe from the exhaust to the protected area to ensure nominal flow.

Problem	Corrective action
“Flow Low” error message	Check that the pipe giving the error is not blocked. Check that the low flow fault threshold is not set too high. Consider increasing the fan speed.
“Flow High” error message	Check that the pipe is pushed home into the inlet and is not broken or cracked. Check that installed pipework is fitted with endcaps. PipeCAD pipe modelling software prompts for the use of appropriate endcaps. Open bore pipes are not recommended. Check that the high flow fault threshold is not set too low. Consider reducing the fan speed.
No display	Check that the display ribbon cable has not been damaged.

Fault and warning messages

Fault and warning messages are shown in the table below.

Table 40: Fault and warning messages

Type	Message	Description
Fault	Flow Low	The current air flow is below the low limit (pipe obstructed)
Fault	Flow High	The current air flow is above the high limit (pipe missing or broken)
Fault	Flow Sensor	Flow sensor failure
Fault	Temperature Sensor	Temperature out of range or sensor failure
Fault	Filter Blocked	The filter is obstructed or dirty
Fault	Filter Removed	The filter has been removed
Fault	Laserhead	Laserhead failure
Fault	Fan Motor	Fan motor failure
Fault	Fan Power	Fan power failure
Fault	Communication	Communication with the device is not possible
Fault	Repeat Address	Repeated address found in the network or cluster
Fault	Too Many Cluster Detectors	There are more than eight detectors in the cluster
Fault	No Cluster Detectors	No detector in a cluster with a Standard or Minimum Display
Fault	Cluster Loop Break	The cluster loop is not closed and Looped Bus is configured
Fault	Network Loop Break	The network loop is not closed and Looped Bus is configured
Fault	Invalid Address	Invalid address assigned to device

Type	Message	Description
Fault	Multiple Cluster Displays	More than one display module found in the cluster
Fault	Display Offline	No display module found by the detector
Fault	Front Cover Removed	Front cover removed
Fault	Input 1 Open Circuit	Input 1 open circuit
Fault	Input 1 Short Circuit	Input 1 short circuit
Fault	Input 2 Open Circuit	Input 2 open circuit
Fault	Input 2 Short Circuit	Input 2 short circuit
Fault	Battery	Battery fault reported by the power supply
Fault	Mains	Mains fault reported by the power supply
Fault	Power Supply Voltage Low	Power supply voltage low
Fault	Internal Memory	Internal memory fault
Fault	External Memory	External memory fault
Fault	Reset from Watchdog	The device has rebooted due to a watchdog failure
Fault	Date and Time Lost	Date and time lost
Fault	Detector Not Calibrated	Detector not calibrated
Fault	Incompatible Versions	Incompatible versions found in the network
Fault	Subsystem	Subsystem fault
Fault	No Pipe Calibration	Pipe calibration data not found
Fault	Invalid Pipe Calibration	Pipe calibration data invalid (new pipe calibration required)
Warning	Disabled	Device disabled
Warning	Installation Test	The device is in installation test
Warning	User Interface LED Test	The device is in LED test
Warning	User Interface TFT Test	The device is in UI test
Warning	User Interface Keys Test	The device is in Key test
Warning	Input Test	The input is in test
Warning	Output Test	The output is in test
Warning	Detection Aborted	Detection aborted due to one or more of the following faults: Front Cover Removed (detector), Fan Motor, Filter Removed, Critical Temperature
Warning	FastLearn Start	FastLearn in progress
Warning	Power Save Mode	Power Save mode enabled

Type	Message	Description
Warning	Flow Low Range	Flow below absolute low range
Warning	Flow High Range	Flow below absolute high range
Warning	Demo Mode	Demo Mode enabled
Warning	Detector Replaced	A cluster detector has been replaced (reset the module to remove the warning)
Warning	Flow Setup Started	Detector in Flow Startup mode
Warning	Pipe Calibration	Detector in Pipe Calibration mode

Chapter 5
Technical specifications

Power supply

Supply voltage	18 to 30 VDC, 24 VDC nominal 21.2 to 27.2 VDC, 24 VDC nominal (UL/cUL and FM)
Current consumption (at 24 VDC)	
Detector module	260 mA (fan speed 1) 380 mA (fan speed 6) 940 mA (fan speed 16)
Minimum display module	204 mA
Command, standard display module	232 mA (display backlight off)

Communications

Display connectivity	USB, Ethernet (TCP/IP), APIC
Data bus length (RS-485)	
SenseNET+	1,200 m (4,000 ft.) max. between nodes or modules
SenseNET	1,200 m (4,000 ft.) max. length (sum of all single cable sections)

Inputs and outputs

Inputs	
Number of inputs	2
End-of-line resistance	15 KΩ 5% 1/4 W
Outputs	
Number of outputs	3
Contact type	C/NO/NC, voltage free
Resistive load	2 A at 30 VDC

Aspirating system

Detection principle	Laser light scattering mass detection
Laser (detector module) Safety class Laser diode	 Class 1 Class 3B
Sensitivity range %obs/m %obs/ft.	 25% min. 0.03% max. FSD 7.62% min. 0.00914% max. FSD
Particle sensitivity range	0.0003 to 10 microns
Alarm levels	4 (Alert/Aux. Alarm, Prealarm, Fire Alarm, Fire Alarm 2)
Fan speed	Configurable (1 to 16)
Air flow measurement Range Resolution Note: Absolute readings of air velocity (temperature compensated)	 1 m/s to 6 m/s (3.3 ft./s to 19.6 ft./s) 0.05 m/s (0.16 ft./s)
Duct air velocity	1219 m/min max. (4000 ft./min) (UL)
Sampling pipe inlets	1 per detector module
Exhaust pipe	1 per detector module
Pipe size (external diameter)	26.75 mm and 25.0 mm Ø (1.050 in. and 0.984 in.)
Pipe length Single pipe Combined, with up to 3 t-pieces	 150 m max. 250 m max.
Sampling holes per pipe (EN 54-20 sensitivity class)	20 holes max. for Class A (most sensitive) 40 holes max. for Class B 50 holes max. for Class C (least sensitive)
Average sound pressure level	38.8 dBA (fan speed 6)
Chart record	From 1 month at 1 s resolution up to 5 years at 60 s resolution per detector module
Event log	20,000 events per module

Mechanical and environmental

Table 41: Mechanical

Dimensions (W x H x D)	110.5 mm x 300 mm x 133.5 mm (4.35 in. x 11.81 in. x 5.25 in.)
Weight (including backplane) Display module Detector module	 1.18 kg (2.6 lb.) 1.57 kg (3.46 lb.)
Number of cable knockouts Top Bottom Back	 3 x Ø 20.7 mm (0.815 in) 2 x Ø 20.7 mm (0.815 in) 2
Detector module orientation	Vertical or horizontal
IP rating Display module Detector module	 IP40 IP40
Flammability rating	UL94 V0
Dust filter replacement	Timed warning integrated.
Detector chamber maintenance	Subject to installation environment

Table 42: Environmental

Operating temperature	−10ºC to +60ºC (0ºC to 38ºC UL/cUL, 0ºC to 49ºC FM)
Storage temperature	−20ºC to +60ºC
Relative humidity	+5 to 95% noncondensing (0 to 90% for UL/cUL and FM) IEC 61010-1 Pollution degree 1 IEC 61010-1 Installation Cat. II

Appendix A
APIC installation

WARNING: To ensure compatibility, only install APIC boards included in the product compatibility list (available to download from firesecurityproducts.com). Incompatible APIC and fire alarm control panel combinations can result in a non-operational system that may fail to perform during an alarm event, with resultant loss of life and/or property.

Install an APIC board into a display module as described below to connect the detector or detector network to a fire alarm control panel.

Connect the addressable loop to the APIC connector on the display backplane PCB before installing the APIC board.

To install the APIC:

1. Remove the front of the display, and then open the inside cover by pulling the holding clips outwards (see Figure 27 on page 106).
2. Connect the APIC ribbon cable to the J501 connector on the display PCB, and then push the APIC board onto the alignment stud.
3. Secure the APIC to the display PCB using 2 x M3 screws.
4. Close the inside cover, and then replace the front of the display.

After installation, configure the APIC functionality from the Device Settings > Inputs menu (Access Level 3 user or higher).

Notes

- Some addressable protocols may limit the maximum number of device addresses to less than 127.
- Some protocols or APIC boards may not support all of the available alarm levels or event types, and fault reporting is a general fault with no detailed fault information.

Read the documentation provided with your APIC board for more information.

Figure 27: APIC installation

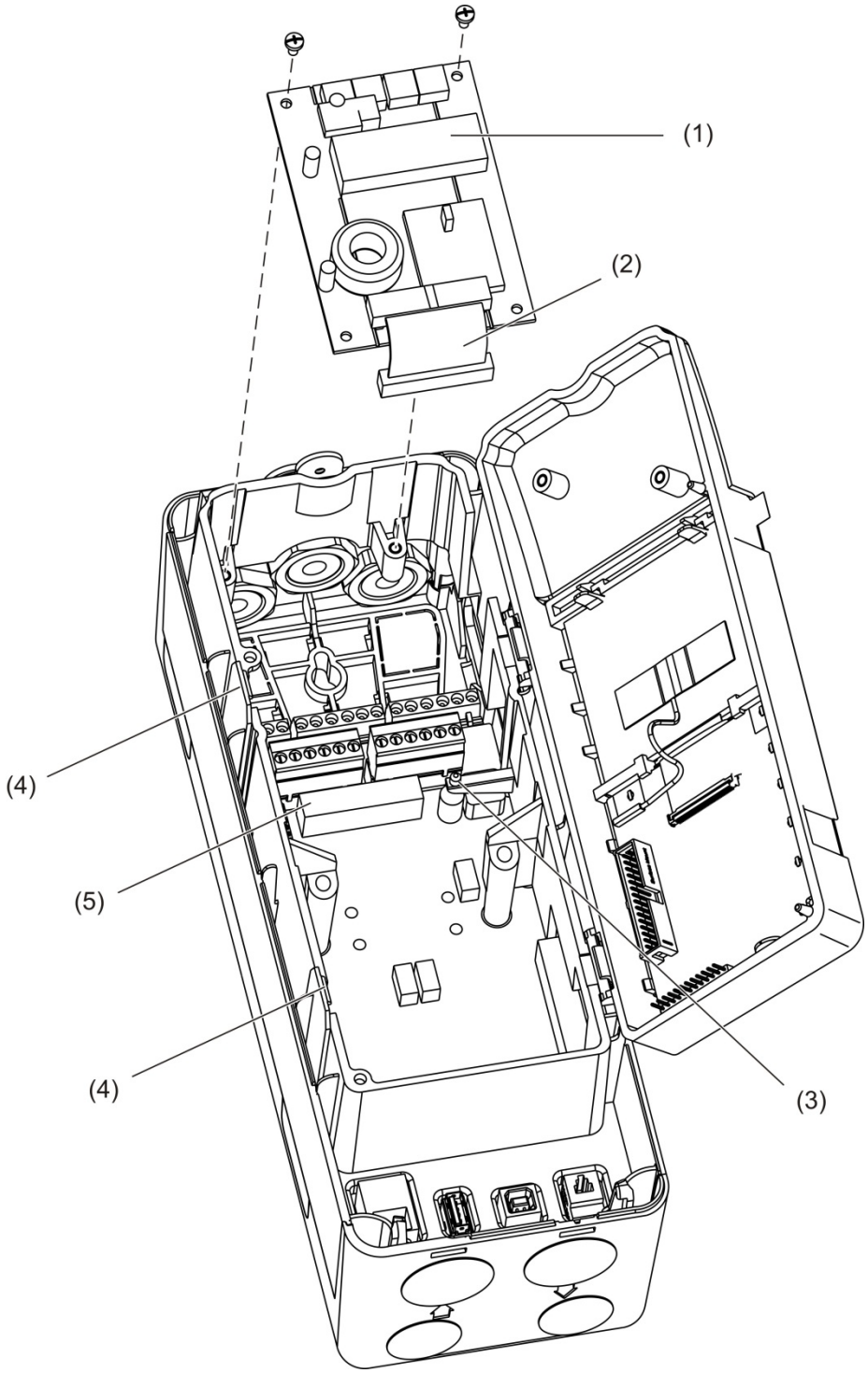

1. APIC board
2. APIC ribbon cable
3. Alignment stud
4. Holding clips
5. J501 connector

Appendix B
Regulatory information

European regulations for construction products

This section provides a summary on the declared performance according to the Construction Products Regulation (EU) 305/2011 and Delegated Regulations (EU) 157/2014 and (EU) 574/2014.

For detailed information, see the product Declaration of Performance (available at firesecurityproducts.com).

Table 43: Regulatory information

Conformity	CE UKCA
Notified/Approved body	2831 0832
Manufacturer	KGS Electronics Sp. z.o.o., Ul. Kolejowa 24, 39-100 Ropczyce, Poland. Authorized EU manufacturing representative: KGS Fire & Security B.V., Kelvinstraat 7, NL-6003 DH, Weert, The Netherlands.
Year of first CE marking	19
Year of first UKCA marking	22
Declaration of Performance number	04-7229-360-0000
EN 54	EN 54-20 Classes A, B, and C [1]
Product identification	See model number on product identification label
Intended use	See the product Declaration of Performance
Declared performance	See the product Declaration of Performance

[1] When used with a compatible display or detector module. See “EN 54-20 compliance” on page 108 for more information.

EN 54-20 compliance

To comply with EN 54-20 requirements:

- All pipes used in the installation must conform to EN 61386-1 Class 1131.
- The Class of any pipework and hole configuration, detector sensitivity and equipment parameters must be determined using PipeCAD software. The applicable values for each Class are shown below.

Class	Hole sensitivity (% obs/m)	Transport time (s)
A	< 0.41	< 70
B	< 2.221	< 85
C	< 3.78	< 95

- The transport time of the last sampling hole must be checked after installation and must be less than or equal to that determined by PipeCAD.
- The flow low and flow high settings must be set to a value not exceeding 20%.
- All modules must be powered by a suitable EN 54-4 approved power supply.
- All cable glands must be rated IP67 or higher.

For more information on PipeCAD, see your PipeCAD documentation.

European standards for electrical safety and electromagnetic compatibility

These products have been designed in accordance with the following European standards for electrical safety and electromagnetic compatibility:

- EN 62368-1
- EN 50130-4
- EN 61000-6-3
- EN 61000-3-2
- EN 61000-3-3

Australia

These products have been designed in accordance with AS 7240.20 Fire detection and alarm systems – Aspirating smoke detectors.

International standards

These products have been designed to meet the following requirements:

- NFPA 72 National Fire Alarm and Signalling Code
- UL 268 Smoke Detectors for Fire Alarm Signalling Systems
- UL 864 Control Units for Fire Protective Signalling Systems
- FM 3230 Smoke Actuated Detectors for Automatic Fire Alarm Signalling
- CSFM California State Fire Marshal
- CAN/ULC-S529 Smoke Detectors for Fire Alarm Systems
- CAN/ULC-S524 Installation of Fire Alarm Systems
- ULC S527 Control Units for Fire Alarm Systems

System reacceptance test after reprogramming (UL/ULC and FM): To ensure proper system operation, this system must be retested in accordance with NFPA 72 after any programming change. Reacceptance testing is also required after any addition or deletion of system components, and after any modification, repair, or adjustment to system hardware, or wiring.

Index

A

access code
- change, 39
- usage, 39

access levels, 38
addressing modules, 30
alarm delays, 69
alarm levels, 68

B

baseline
- save, 75
- view, 51

C

cables, recommended, 20
chart record
- clear, 81
- sampling rate, 81
- view, save, 53

ClassiFire
- configuration, 70
- description, 3

clusters
- distributed cluster, 24
- hybrid cluster, 25
- non-distributed cluster, 23
- overview, 23

configuration
- add custom logo, 83
- alarm delays, 69
- alarm levels, 68
- building management system, 77
- ClassiFire, 70
- controls, 41
- day/night operation, 71
- email accounts, 79
- email server, 79
- firmware upgrade, 84
- flow parameters, 72
- inputs, 62
- MatrixScan, 74
- network setup, 76
- outputs, 64
- referencing, 73
- restore cluster configuration, 67
- restore default logo, 83
- restore default settings, 67
- saving, loading files, 66
- TCP/IP, 78

connections
- backplane connectors, 21
- distributed cluster, 24
- fire alarm control panel, 29
- hybrid cluster, 25
- inputs, 26
- multiple cluster networks, 27
- non-distributed cluster, 23
- outputs, 26
- PC, 34
- power supply, 26
- power supply fault supervision, 27

connectivity, 3

D

date and time
- format, 49
- set, 60

day/night operation, 71
daylight saving, 49
detector module, 7
detector status
- icons, values, and messages, 47
- view, 46

device
- description, 61
- disable, enable, 57
- latching status, 61

disable device, 57
display module controls, 41

E

enable device, 57
event log
- view, save, 52

F

fault messages, 98
firmware upgrade, 84

flow setup menu, 72

I

input
- configuration, 62
- connections, 26
- test, 55

installation
- APIC board, 105
- backplane, 17
- display, detector modules, 31
- dust filter, 95
- pipe, 32
- pipe adaptor, 32

internal layout
- backplane, 14
- detector module, 16
- display module, 15

L

latching status, 61
LED indications, 9

M

main menu
- access level 2 user, 49
- access level 3 user, 59
- access level 4 user, 82

MatrixScan, 74
measurement units, 49
module overview, 5

N

network setup, 76

O

operation
- access level 1 user, 45
- access level 2 user, 45
- access level 3 user, 59
- access level 4 user, 82

output
- configuration, 64
- connections, 26
- test, 55

R

referencing, 73
reset, 57

S

software applications, 4

T

test
- diagnostics, 56
- input, 55
- installation, 54
- output, 55
- user interface, 56

TFT display
- backlight, 50
- localization options, 49
- screen properties, 50

U

USB device
- remove, 80

USB device, remove, 52

W

warning messages, 98
wizards, 43